BHM SERIES

7～15W DC/DC CONVERTERS
Single Output & Dual Outputs

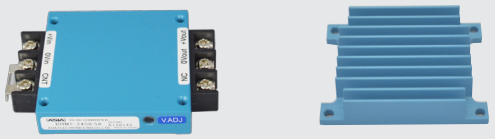

H12.8×W50×L75 (mm)

■ Features

- ●Low Profile 12.8mm
- ●Built-in Input Filter
- ●Input-Output Isolation
- ●High Efficiency 77～88%
- ●Wide Input Voltage Range
- ●High Reliability
- ●6 Sided Metal Shielding
- ●Remote ON/OFF Control
- ●Adjustable Output Volt. ±5%
- ●Output Over Voltage Protection 115～140% Operation
- ●Operating Ambient Temperature −40℃～+85℃
- ●Max. Case Temperature +105℃
- ●Conformity to RoHS2 Directive
- ●Not built-in aluminum and tantalum electrolytic capacitor

- ●薄型 12.8mm
- ●入力フィルタ内蔵
- ●入出力間絶縁
- ●高効率 77～88%
- ●広範囲な入力電圧
- ●高信頼性
- ●６面メタルシールド
- ●ﾘﾓｰﾄON/OFFｺﾝﾄﾛｰﾙ
- ●可変出力電圧 ±5%
- ●出力過電圧保護回路内蔵 115～140% 動作
- ●動作周囲温度 −40℃～+85℃
- ●最大ケース温度 +105℃
- ●RoHS2指令対応
- ●アルミ電解コンデンサ及び タンタルコンデンサ不使用

■ General Characteristics

(at Ta : 25℃, Full Load, Nominal Vin)

●Input Voltage, Range	DC5, 12, 24, 48V (See Table 1)
●Output Voltage, Current	See Table 1
●Output Voltage Range	±5% Adjustable
●Efficiency	See Table 1
●Line Regulation	±0.3% max. (at Vin Range)
●Load Regulation	Single : ±0.5% max. (0～100% Load) Dual : ±3% max. (10～100% Load)
●Reflected Input Ripple, Noise	(3% Vin) Vp-p max.
●Output Ripple	40mVp-p max. 100mVp-p max. (48V Vout only)
●Output Noise	100mVp-p max. 200mVp-p max. (48V Vout only)
●Short Circuit Protection	Built-in, Auto-restart (See Fig. 2)
●Over Voltage Protection	115～140% Output Voltage
●Remote ON/OFF Control	ON : Short or 0～0.8V OFF : Open or 2～10V (Between terminal ② ～ ③)
●Temperature Coefficient	0.02%/℃ max.
●Operating Ambient Temp.	−40℃～+85℃ (See Fig. 1) −30℃～+85℃ (5V Vin only)
●Max. Case Temperature	+105℃
●Storage Temperature	−40℃～+115℃
●Isolation Voltage	AC1500V one minute (Input−Output−Case)
●Isolation Impedance	100MΩ min. (at DC1000V) (Input−Output−Case)
●Weight	Main Body : 100g max. Heat Sink : 40g max.
●Humidity	20～95% RH
●Shock	490m/s² (11msec 3directions)
●Vibration	10～55Hz 98m/s² (30minutes 3directions)
●Surface Structure	6 Sided Aluminum Case
●MTBF	Single : 1,000,000H Dual : 700,000H (Ta : 25℃, 80% Load, Nominal Vin)
●Warranty	5 years

■ Terminal Outs & Dimensions (±0.5mm)

〈Top View〉

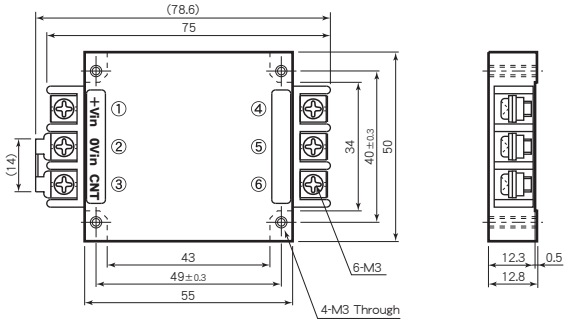

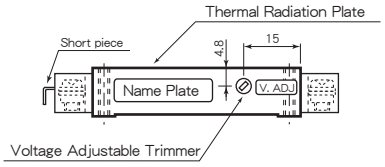

Terminal Outs

Single Output		Dual Outputs	
①	+Vdc in	①	+Vdc in
②	0 Vdc in	②	0 Vdc in
③	ON/OFF Control	③	ON/OFF Control
④	+Vdc out	④	+Vdc out
⑤	0 Vdc out	⑤	Common
⑥	No Connection	⑥	−Vdc out

■ Option Heat Sink

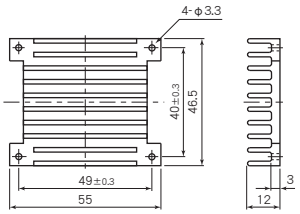

＊Option Heat Sink Model : A3-13988

■ Selection Guide

Table 1

Model Number	Input Volt. (Range) (V. DC)	Output Voltage (V. DC)	Output Current (A)	Efficiency (Typical) (%)
BHM 5 −3.3 S 2 A	5 (4.5～9)	3.3	2	83
BHM 5 − 5 S 2 A		5	2	82
BHM 5 − 6 S 1.8 A		6	1.8	82
BHM 5 −12 S 1 A		12	1	84
BHM 5 −15 S 0.8 A		15	0.8	83
BHM 5 −24 S 0.5 A		24	0.5	83
BHM 5 −28 S 0.4 A		28	0.4	83
BHM 5 − 5 D 1 A		±5	±1	77
BHM 5 −12 D 0.5 A		±12	±0.5	81
BHM 5 −15 D 0.4 A		±15	±0.4	81
BHM12 −3.3 S 2.4 A	12 (8～18)	3.3	2.4	83
BHM12 − 5 S 2.4 A		5	2.4	85
BHM12 − 6 S 2.2 A		6	2.2	85
BHM12 −12 S 1.3 A		12	1.3	85
BHM12 −15 S 1 A		15	1	85
BHM12 −24 S 0.65 A		24	0.65	85
BHM12 −28 S 0.5 A		28	0.5	85
BHM12 −48 S 0.3 A		48	0.3	85
BHM12 − 5 D 1.2 A		±5	±1.2	78
BHM12 −12 D 0.65 A		±12	±0.65	83
BHM12 −15 D 0.5 A		±15	±0.5	83
BHM24 −3.3 S 2.4 A	24 (16～36)	3.3	2.4	84
BHM24 − 5 S 2.4 A		5	2.4	86
BHM24 − 6 S 2.2 A		6	2.2	86
BHM24 −12 S 1.3 A		12	1.3	86
BHM24 −15 S 1 A		15	1	86
BHM24 −24 S 0.65 A		24	0.65	86
BHM24 −28 S 0.5 A		28	0.5	86
BHM24 −48 S 0.3 A		48	0.3	85
BHM24 − 5 D 1.2 A		±5	±1.2	78
BHM24 −12 D 0.65 A		±12	±0.65	83
BHM24 −15 D 0.5 A		±15	±0.5	83
BHM48 −3.3 S 2.4 A	48 (32～76)	3.3	2.4	83
BHM48 − 5 S 2.4 A		5	2.4	86
BHM48 − 6 S 2.2 A		6	2.2	86
BHM48 −12 S 1.3 A		12	1.3	88
BHM48 −15 S 1 A		15	1	88
BHM48 −24 S 0.65 A		24	0.65	86
BHM48 −28 S 0.5 A		28	0.5	86
BHM48 − 5 D 1.2 A		±5	±1.2	80
BHM48 −12 D 0.65 A		±12	±0.65	85
BHM48 −15 D 0.5 A		±15	±0.5	85

※ 上記仕様以外にも対応可能ですので お問い合わせ下さい。
Please consult with us about other specification.

■ Block Diagram

Single Output

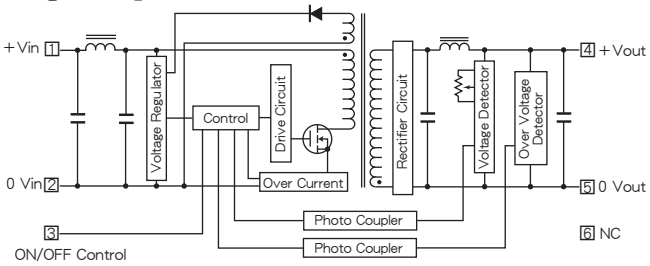

Dual Outputs

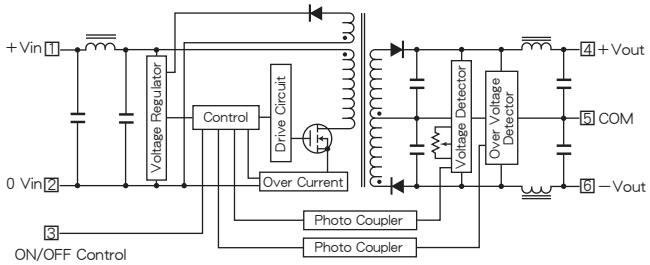

■ Characteristic Curves

Fig. 1 Derating Curve

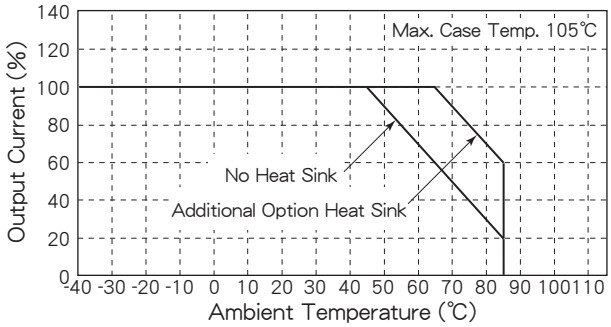

Fig. 2 Short Circuit Operating Area

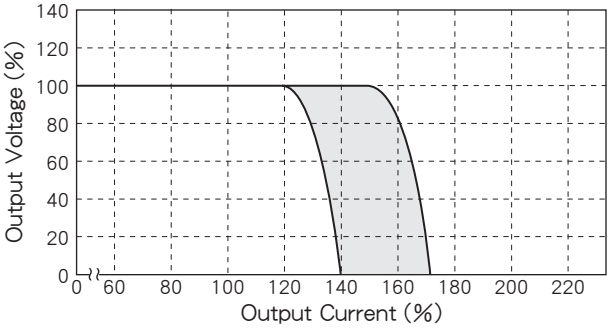

Fig. 3 Temperature Characteristic on Case Surface

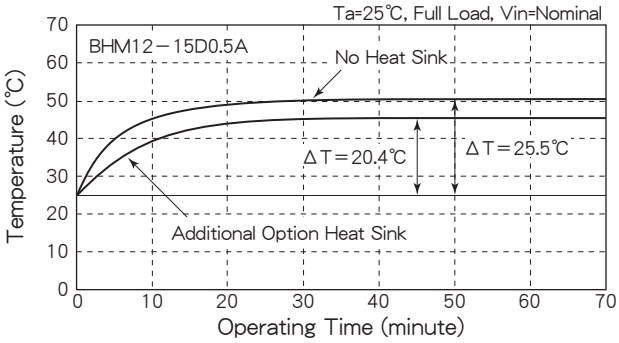

Fig. 4 Efficiency vs. Output Current

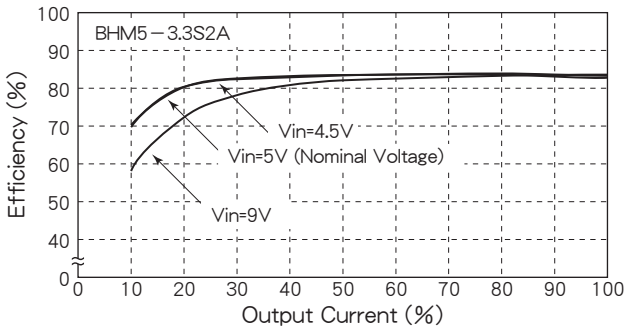

Fig. 5 Efficiency vs. Output Current

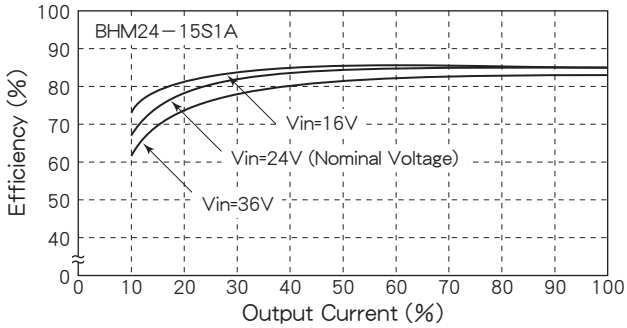

Fig. 6 Efficiency vs. Output Current

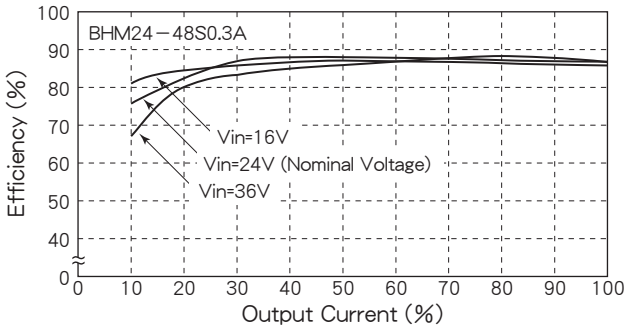

Fig. 7 Efficiency vs. Output Current

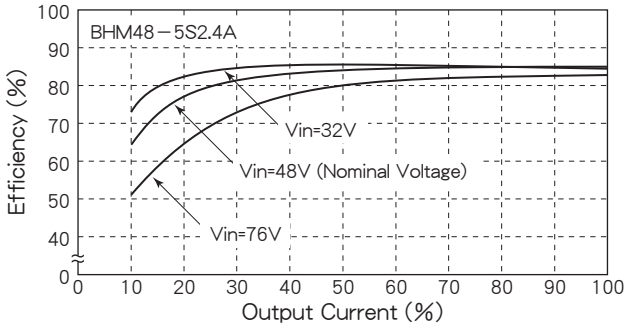

Fig. 8 Efficiency vs. Output Current

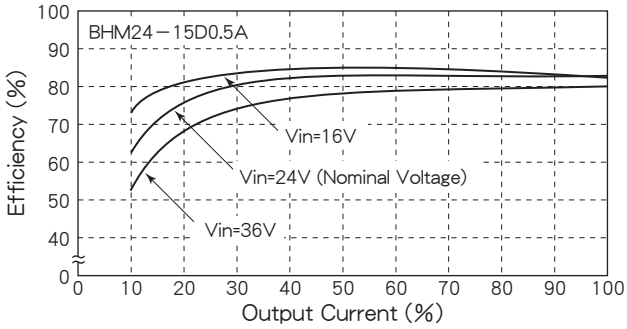

BRM SERIES

23～30W DC/DC CONVERTERS Single Output

H12.8×W50×L75 (mm)

■ Terminal Outs & Dimensions (±0.5mm)

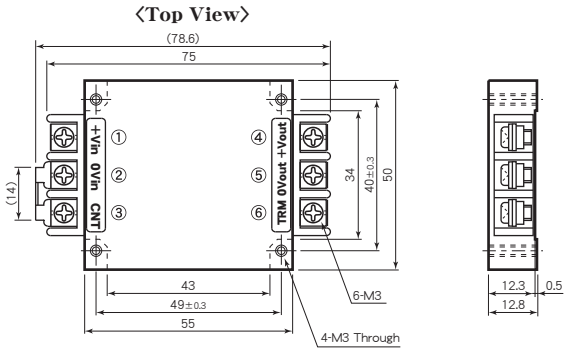

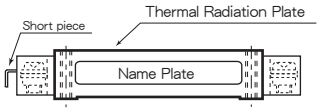

Terminal Outs

①	+Vdc in
②	0 Vdc in
③	ON/OFF Control
④	+Vdc out
⑤	0 Vdc out
⑥	TRM

Application

ON/OFF Control and Vout Adjustment

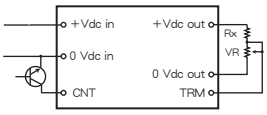

Vout (V)	3.3V	5V	6V	12V	15V	24V	28V	48V
VR (Ω)	50k	50k	50k	50k	50k	50k	50k	50k
Rx (Ω)	10k	33k	47k	47k	62k	110k	130k	220k

■ Features

- ●Low Profile 12.8mm
- ●Built-in Input Filter
- ●Input-Output Isolation (AC2000V)
- ●High Efficiency 87～90%
- ●Wide Input Voltage Range
- ●High Reliability
- ●6 Sided Metal Shielding
- ●Remote ON/OFF Control
- ●Adjustable Output Volt. ±5%
- ●Input Low Voltage Protection
- ●Input Over Voltage Protection
- ●Output Over Voltage Protection 115～140% Operation
- ●Thermal Protection +110℃～+120℃
- ●Operating Ambient Temperature −40℃～+85℃
- ●Max. Case Temperature +105℃
- ●Conformity to RoHS2 Directive
- ●Not built-in aluminum and tantalum electrolytic capacitor

- ●薄型 12.8mm
- ●入力フィルタ内蔵
- ●入出力間絶縁 (AC2000V)
- ●高効率 87～90%
- ●広範囲な入力電圧
- ●高信頼性
- ●６面メタルシールド
- ●ﾘﾓｰﾄON/OFFｺﾝﾄﾛｰﾙ
- ●可変出力電圧 ±5%
- ●入力低電圧保護回路内蔵
- ●入力過電圧保護回路内蔵
- ●出力過電圧保護回路内蔵 115～140% 動作
- ●過熱保護回路内蔵 +110℃～+120℃
- ●動作周囲温度 −40℃～+85℃
- ●最大ケース温度 +105℃
- ●RoHS2指令対応
- ●アルミ電解コンデンサ及び タンタルコンデンサ不使用

■ General Characteristics

(at Ta : 25℃, Full Load, Nominal Vin)

●Input Voltage, Range	DC12, 24, 48,100V (See Table 1)
●Output Voltage, Current	See Table 1
●Output Voltage Accuracy	±2% ±3% (3.3, 5, 6V Vout only)
●Output Voltage Range	±5% Adjustable (Used trimmer)
●Efficiency	See Table 1
●Line Regulation	±0.3% max. (at Vin Range)
●Load Regulation	±0.5% max. (0～100% Load)
●Reflected Input Ripple, Noise	(3% Vin) Vp-p max.
●Output Ripple	40mVp-p max. 100mVp-p max. (48V Vout only)
●Output Noise	100mVp-p max. 200mVp-p max. (48V Vout only)
●Short Circuit Protection	Built-in, Auto-restart (See Fig. 2)
●Over Voltage Protection	115～140% Output Voltage
●Remote ON/OFF Control	ON : Short or 0～0.8V OFF : Open or 2～10V (Between terminal ② ～ ③)
●Temperature Coefficient	0.02%/℃ max.
●Operating Ambient Temp.	−40℃～+85℃ (See Fig. 1)
●Max. Case Temperature	+105℃
●Storage Temperature	−50℃～+115℃
●Isolation Voltage	AC2000V one minute (Input−Output−Case)
●Isolation Impedance	100MΩ min. (at DC1000V) (Input−Output−Case)
●Weight	Main Body : 100g max. Heat Sink : 40g max.
●Humidity	20～95% RH
●Shock	490m/s² (11msec 3directions)
●Vibration	10～55Hz 98m/s² (30minutes 3directions)
●Surface Structure	6 Sided Aluminum Case
●MTBF	500,000H (Ta : 25℃, 80% Load, Nominal Vin)
●Warranty	5 years

■ Option Heat Sink

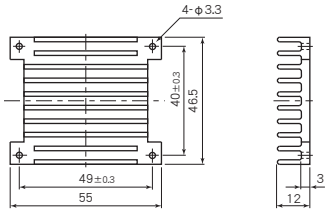

＊Option Heat Sink Model : A3-13988

■ Selection Guide

Table 1

Model Number	Input Volt. (Range) (V. DC)	Output Voltage (V. DC)	Output Current (A)	Efficiency (Typical)(%) 20% Load	80% Load
BRM12−3.3S 7A	12 (8～18)	3.3	7	84	87
BRM12− 5S 6A		5	6	84	90
BRM12− 6S 5A		6	5	84	90
BRM12−12S 2.5A		12	2.5	84	90
BRM12−15S 2A		15	2	84	90
BRM12−24S 1.25A		24	1.25	84	90
BRM12−28S 1.07A		28	1.07	84	90
BRM12−48S 0.6A		48	0.6	84	90
BRM24−3.3S 7A	24 (16～36)	3.3	7	84	87
BRM24− 5S 6A		5	6	84	90
BRM24− 6S 5A		6	5	84	90
BRM24−12S 2.5A		12	2.5	84	90
BRM24−15S 2A		15	2	84	90
BRM24−24S 1.25A		24	1.25	84	90
BRM24−28S 1.07A		28	1.07	84	90
BRM24−48S 0.6 A		48	0.6	84	90
BRM48−3.3S 7 A	48 (32～76)	3.3	7	84	87
BRM48− 5S 6 A		5	6	84	90
BRM48− 6S 5 A		6	5	84	90
BRM48−12S 2.5A		12	2.5	84	90
BRM48−15S 2 A		15	2	84	90
BRM48−24S 1.25A		24	1.25	84	90
BRM48−28S 1.07A		28	1.07	84	90
BRM100−3.3S 7 A	100 (64～144)	3.3	7	84	87
BRM100− 5S 6 A		5	6	84	90
BRM100− 6S 5 A		6	5	84	90
BRM100−12S 2.5 A		12	2.5	84	90
BRM100−15S 2 A		15	2	84	90
BRM100−24S 1.25A		24	1.25	84	90
BRM100−28S 1.07A		28	1.07	84	90

※ 上記仕様以外にも対応可能ですので お問い合わせ下さい。
Please consult with us about other specification.

■ Block Diagram

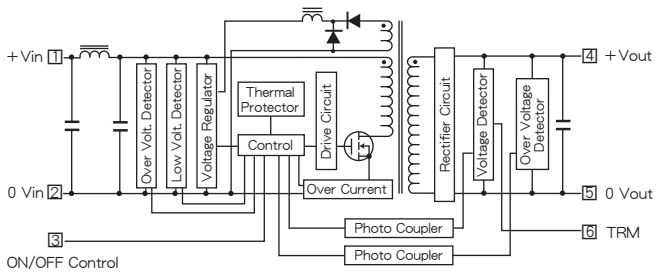

■ Characteristic Curves

Fig. 1 Derating Curve

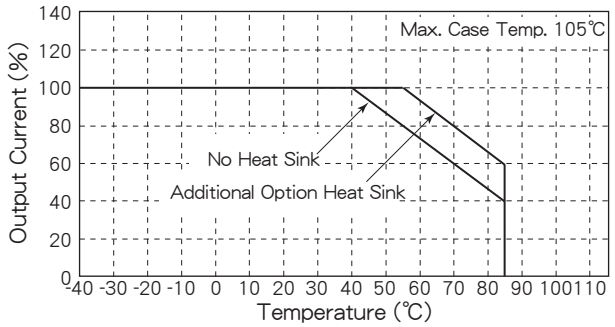

Fig. 2 Short Circuit Operating Area

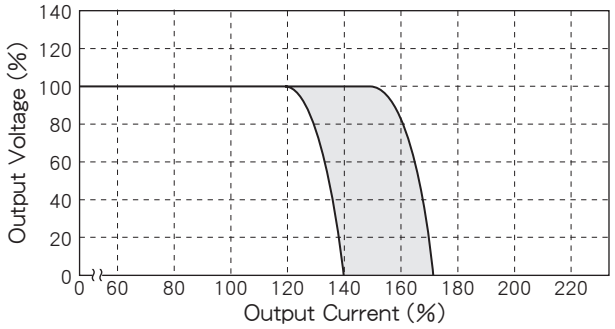

Fig. 3 Temperature Characteristic on Case Surface

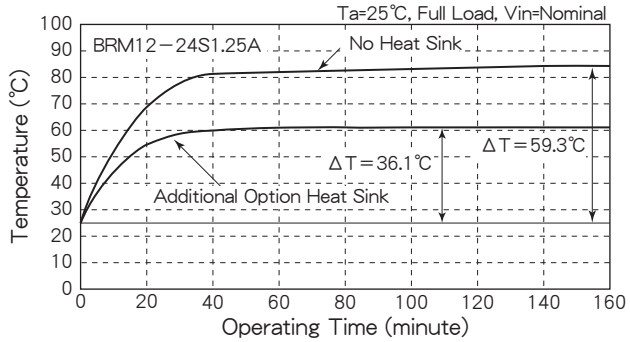

Fig. 4 Efficiency vs. Output Current

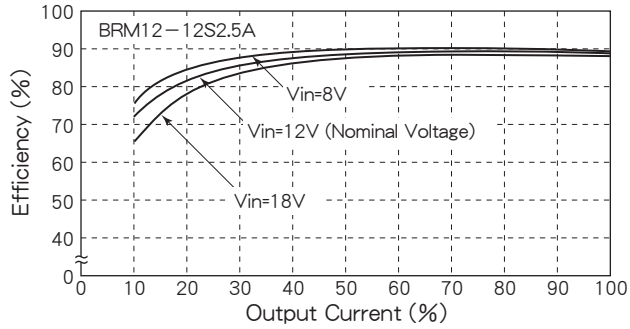

Fig. 5 Efficiency vs. Output Current

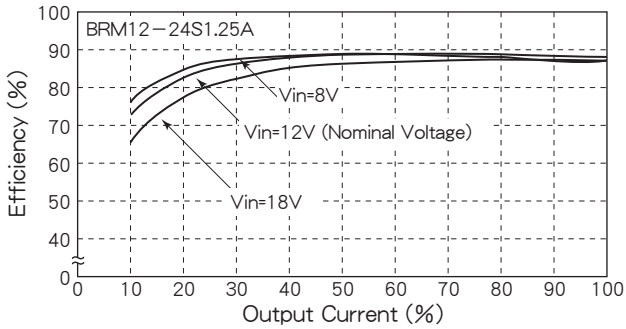

Fig. 6 Efficiency vs. Output Current

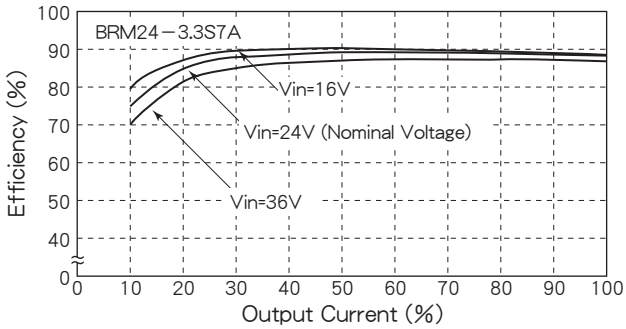

Fig. 7 Efficiency vs. Output Current

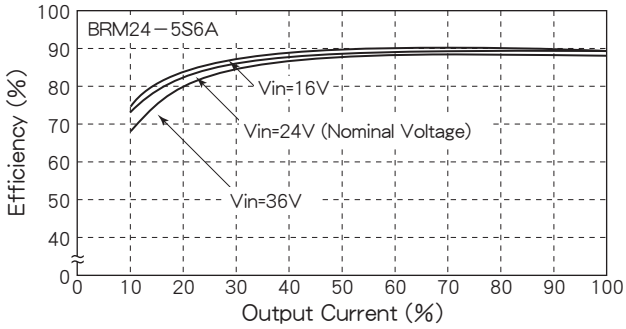

Fig. 8 Efficiency vs. Output Current

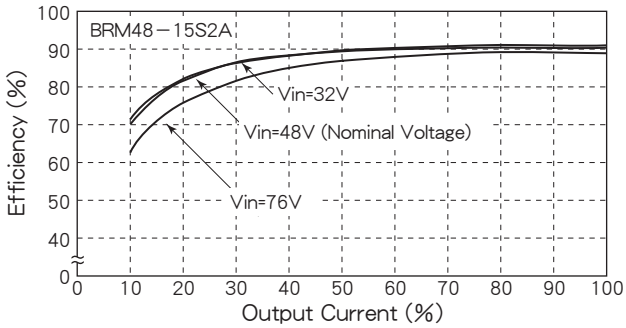

Fig. 9 Efficiency vs. Output Current

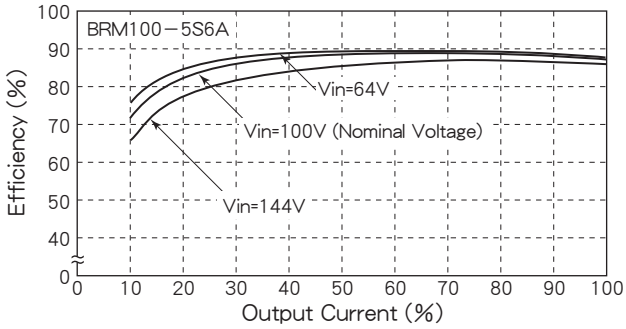

BPM SERIES

20～50W DC/DC CONVERTERS
Single Output & Dual Outputs

H12.8×W50×L95 (mm)

■ Terminal Outs & Dimensions (±0.5mm)

〈Top View〉

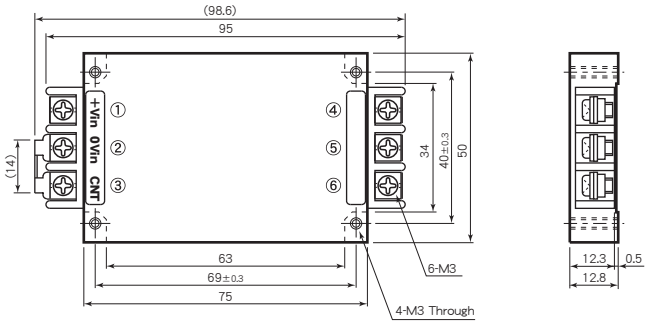

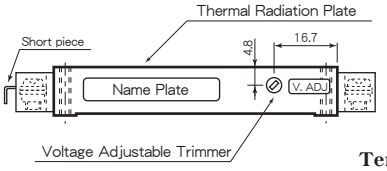

Terminal Outs

Single Output		Dual Outputs	
①	+Vdc in	①	+Vdc in
②	0 Vdc in	②	0 Vdc in
③	ON/OFF Control	③	ON/OFF Control
④	+Vdc out	④	+Vdc out
⑤	0 Vdc out	⑤	Common
⑥	No Connection	⑥	−Vdc out

■ Features

- ●Low Profile 12.8mm
- ●6 Sided Metal Shielding
- ●Built-in Input Filter
- ●Wide Input Voltage Range
- ●Input-Output Isolation
- ●Adjustable Output Volt. ±5%
- ●High Efficiency 81～90%
- ●Remote ON/OFF Control
- ●Input Low Voltage Protection
- ●Input Over Voltage Protection
- ●Output Over Voltage Protection 115～140% Operation
- ●Thermal Protection +110℃～+120℃
- ●Operating Ambient Temperature −40℃～+85℃
- ●Max. Case Temperature +105℃
- ●High Reliability
- ●Conformity to RoHS2 Directive
- ●Not built-in aluminum and tantalum electrolytic capacitor

- ●薄型 12.8mm
- ●６面メタルシールド
- ●入力フィルタ内蔵
- ●広範囲な入力電圧
- ●入出力間絶縁
- ●可変出力電圧 ±5%
- ●高効率 81～90%
- ●ﾘﾓｰﾄON/OFFｺﾝﾄﾛｰﾙ
- ●入力低電圧保護回路内蔵
- ●入力過電圧保護回路内蔵
- ●出力過電圧保護回路内蔵 115～140% 動作
- ●過熱保護回路内蔵 +110℃～+120℃
- ●動作周囲温度 −40℃～+85℃
- ●最大ケース温度 +105℃
- ●高信頼性
- ●RoHS2指令対応
- ●アルミ電解コンデンサ及び タンタルコンデンサ不使用

■ Option Heat Sink

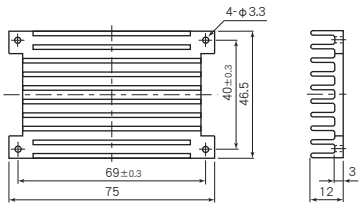

＊Option Heat Sink Model : A3-13987

■ General Characteristics

(at Ta : 25℃, Full Load, Nominal Vin)

●Input Voltage, Range	DC12, 24, 48, 100V (See Table 1)
●Output Voltage, Current	See Table 1
●Output Voltage Range	±5% Adjustable
●Efficiency	See Table 1
●Line Regulation	±0.3% max. (at Vin Range)
●Load Regulation	Single : ±0.5% max. (0～100% Load) Dual : ±3% max. (10～100% Load)
●Reflected Input Ripple, Noise	(3% Vin) Vp-p max.
●Output Ripple	40mVp-p max.
●Output Noise	100mVp-p max.
●Short Circuit Protection	Built-in, Auto-restart (See Fig. 2)
●Over Voltage Protection	115～140% Output Voltage
●Remote ON/OFF Control	ON : Short or 0～0.8V OFF : Open or 2～10V (Between terminal ② ～ ③)
●Temperature Coefficient	0.02%/℃ max.
●Operating Ambient Temp.	−40℃～+85℃ (See Fig. 1)
●Max. Case Temperature	+105℃
●Storage Temperature	−40℃～+115℃
●Isolation Voltage	AC1500V 1 min. AC2000V 1 min. (100V Vin only) (Input−Output−Case)
●Isolation Impedance	100MΩ min. (at DC1000V) (Input−Output−Case)
●Weight	Main Body : 150g max. Heat Sink : 55g max.
●Humidity	20～95% RH
●Shock	490m/s² (11msec 3directions)
●Vibration	10～55Hz 98m/s² (30minutes 3directions)
●Surface Structure	6 Sided Aluminum Case
●MTBF	Single : 500,000H Dual : 600,000H (Ta : 25℃, 80% Load, Nominal Vin)
●Warranty	5 years

■ Selection Guide

Table 1

Model Number	Input Voltage (Range) (V. DC)	Output Voltage (V. DC)	Output Current (A)	Efficiency (typ.) (%) 30% Load	Efficiency (typ.) (%) 80% Load
BPM12−3.3S 12A	12 (8～18)	3.3	12	87	85
BPM12− 5S 10A		5	10	86	89
BPM12− 6S 8.4A		6	8.4	87	87
BPM12−12S 4.2A		12	4.2	84	88
BPM12−15S 3.3A		15	3.3	83	88
BPM12−24S 2.1A		24	2.1	83	88
BPM12−3.3D 3A		±3.3	±3	80	81
BPM12− 5D 3A		±5	±3	80	82
BPM12−12D 1.5A		±12	±1.5	81	83
BPM12−15D 1.2A		±15	±1.2	81	84
BPM24−3.3S 12A	24 (16～36)	3.3	12	84	85
BPM24− 5S 10A		5	10	85	88
BPM24− 6S 8.4A		6	8.4	87	89
BPM24−12S 4.2A		12	4.2	84	89
BPM24−15S 3.3A		15	3.3	85	89
BPM24−24S 2.1A		24	2.1	84	89
BPM24−3.3D 3A		±3.3	±3	80	81
BPM24− 5D 3A		±5	±3	80	82
BPM24−12D 1.5A		±12	±1.5	81	84
BPM24−15D 1.2A		±15	±1.2	82	85
BPM48−3.3S 12A	48 (32～72)	3.3	12	85	86
BPM48− 5S 10A		5	10	85	88
BPM48− 6S 8.4A		6	8.4	85	88
BPM48−12S 4.2A		12	4.2	85	88
BPM48−15S 3.3A		15	3.3	85	90
BPM48−24S 2.1A		24	2.1	85	90
BPM48−3.3D 3A		±3.3	±3	80	81
BPM48− 5D 3A		±5	±3	80	82
BPM48−12D 1.5A		±12	±1.5	81	84
BPM48−15D 1.2A		±15	±1.2	82	85
BPM100−3.3S 12A	100 (64～144)	3.3	12	84	87
BPM100− 5S 10A		5	10	86	89
BPM100− 6S 8.4A		6	8.4	84	89
BPM100−12S 4.2A		12	4.2	85	90
BPM100−15S 3.3A		15	3.3	85	90
BPM100−24S 2.1A		24	2.1	85	90
BPM100−3.3D 3A		±3.3	±3	80	81
BPM100− 5D 3A		±5	±3	80	82
BPM100−12D 1.5A		±12	±1.5	81	84
BPM100−15D 1.2A		±15	±1.2	82	85

※ 上記仕様以外にも対応可能ですので お問い合わせ下さい。
Please consult with us about other specification.

■ Block Diagram

Single Output

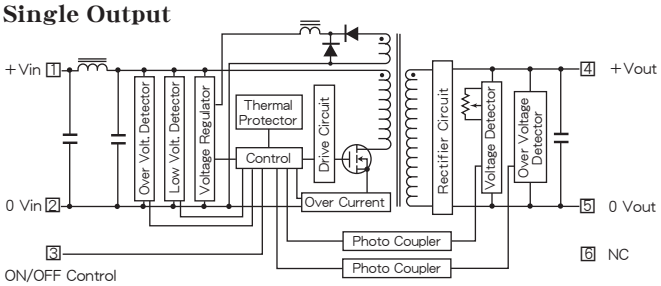

Dual Outputs

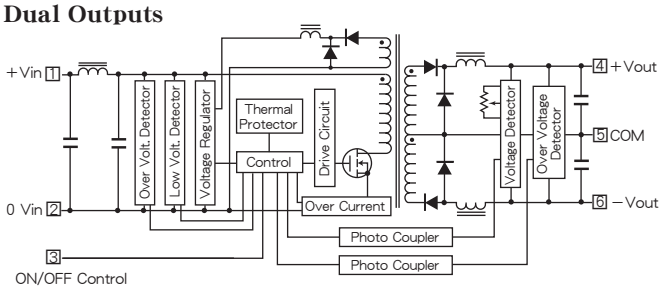

■ Characteristic Curves

Fig. 1 Derating Curve

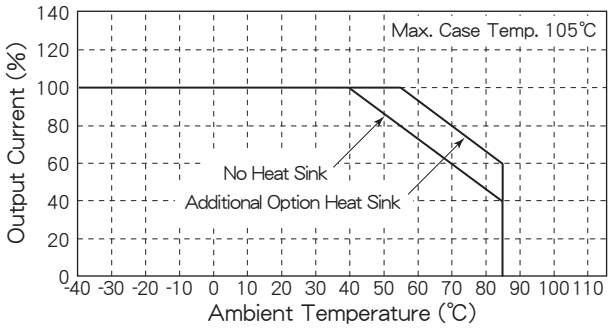

Fig. 2 Short Circuit Operating Area

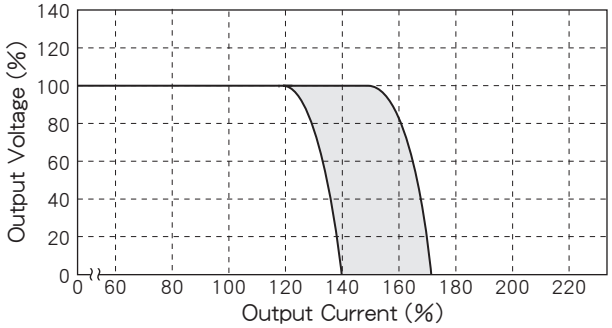

Fig. 3 Temperature Characteristic on Case Surface

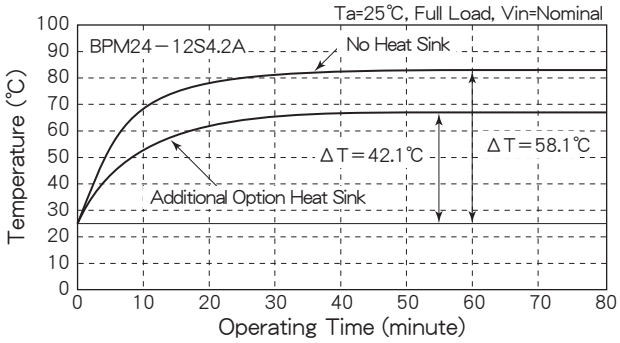

Fig. 4 Efficiency vs. Output Current

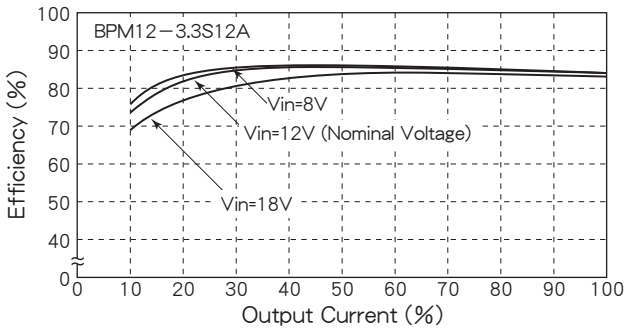

Fig. 5 Efficiency vs. Output Current

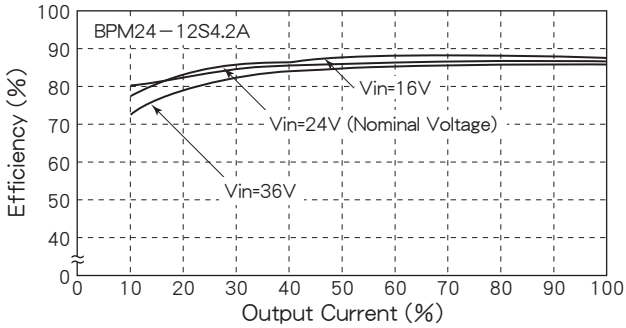

Fig. 6 Efficiency vs. Output Current

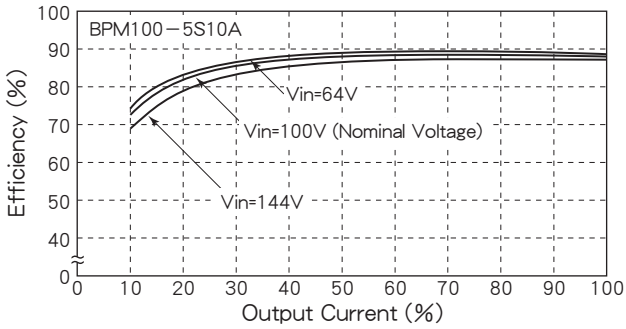

Fig. 7 Efficiency vs. Output Current

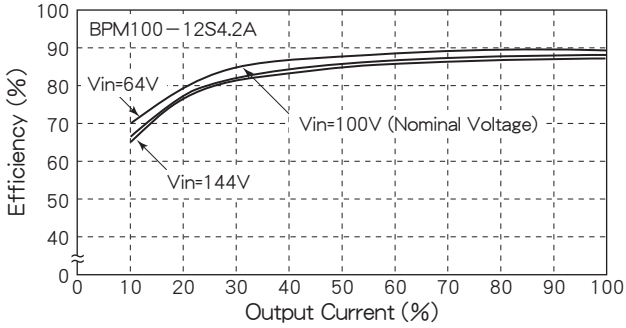

Fig. 8 Efficiency vs. Output Current

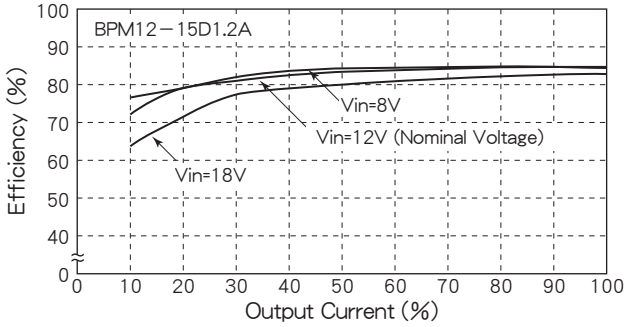

QD SERIES

40～50W DC/DC CONVERTERS Single Output

QDU type

H16×W50×L82 (mm)

QDS type

H16×W50×L82 (mm)

■ Features

- ●Low Profile 16mm ●薄型 16mm
- ●Built-in Input Filter ●入力フィルタ内蔵
- ●Wide Input Voltage Range ●広範囲な入力電圧
- ●Input-Output Isolation ●入出力間絶縁
- ●Adjustable Output Volt. ±5% ●可変出力電圧 ±5%
- ●Input Low Voltage Protection ●入力低電圧保護回路内蔵
- ●Input Over Voltage Protection ●入力過電圧保護回路内蔵
- ●Output Over Voltage Protection 115～140% Operation ●出力過電圧保護回路内蔵 115～140%にて動作
- ●High Efficiency 86～90% ●高効率 86～90%
- ●Thermal Protection +110℃～+120℃ ●過熱保護回路内蔵 +110℃～+120℃
- ●Operating Ambient Temperature −40℃～+85℃ ●動作周囲温度 −40℃～+85℃
- ●Conformity to RoHS2 Directive ●RoHS2指令対応
- ●Not built-in aluminum and tantalum electrolytic capacitor ●アルミ電解コンデンサ及びタンタルコンデンサ不使用

■ General Characteristics

(at Ta：25℃, Full Load, Nominal Vin)

●Input Voltage, Range	DC12, 24, 48, 100V (See Table 1)
●Output Voltage, Current	See Table 1
●Output Voltage Range	±5% Adjustable
●Efficiency	See Table 1
●Line Regulation	±0.3% max. (at Vin Range)
●Load Regulation	±0.5% max. (0～100% Load)
●Reflected Input Ripple, Noise	(3% Vin)Vp-p max.
●Output Ripple	40mVp-p max.
●Output Noise	100mVp-p max.
●Short Circuit Protection	Built-in, Auto-restart (See Fig. 2)
●Over Voltage Protection	115~140% Output Voltage
●Temperature Coefficient	0.02%/℃ max.
●Operating Ambient Temp.	−40℃～+85℃ (See Fig. 1)
●Storage Temperature	−40℃～+115℃
●Isolation Voltage	AC1500V one minute (Input−Output−Case)
●Isolation Impedance	100MΩ min. (at DC1000V) (Input−Output−Case)
●Weight	150g max.
●Humidity	20～95% RH
●Shock	490m/s² (11msec 3directions)
●Vibration	10～55Hz 98m/s² (30minutes 3directions)
●Surface Structure	6 Sided Aluminum Case
●MTBF	500,000H (Ta：25℃, 80% Load, Nominal Vin)
●Warranty	5 years

■ Terminal Outs & Dimensions (±0.5mm)

QDU type

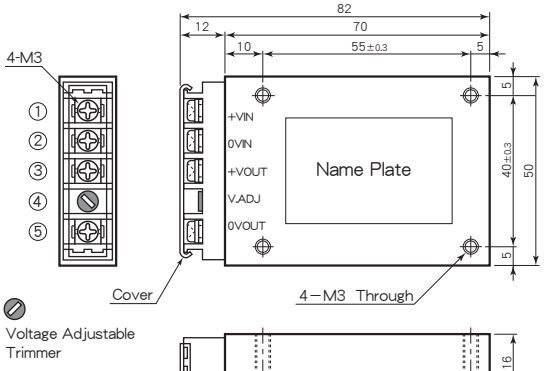

Terminal Outs

①	+Vdc in
②	0 Vdc in
③	+Vdc out
④	Vout Adjustment
⑤	0 Vdc out

QDS type

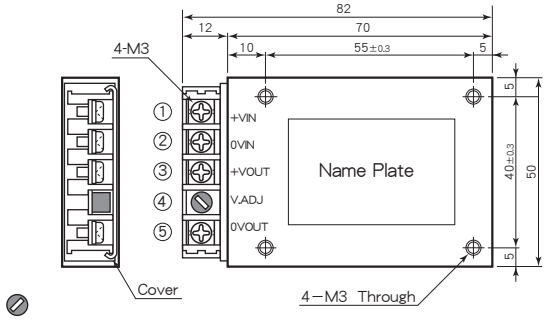

Terminal Outs

①	+Vdc in
②	0 Vdc in
③	+Vdc out
④	Vout Adjustment
⑤	0 Vdc out

■ Selection Guide

Table 1

Model Number	Input Volt. (Range) (V. DC)	Output Voltage (V. DC)	Output Current (A)	Efficiency (Typical)(%) 20% Load	80% Load
QDU(QDS) 12−3.3S 12A	12 (8～18)	3.3	12	81	86
QDU(QDS) 12− 5S 10A		5	10	82	88
QDU(QDS) 12− 6S 8.4A		6	8.4	82	88
QDU(QDS) 12− 12S 4.2A		12	4.2	83	88
QDU(QDS) 12− 15S 3.3A		15	3.3	83	88
QDU(QDS) 12− 24S 2.1A		24	2.1	83	88
QDU(QDS) 24−3.3S 12A	24 (16～36)	3.3	12	81	86
QDU(QDS) 24− 5S 10A		5	10	85	88
QDU(QDS) 24− 6S 8.4A		6	8.4	85	88
QDU(QDS) 24− 12S 4.2A		12	4.2	84	89
QDU(QDS) 24− 15S 3.3A		15	3.3	84	89
QDU(QDS) 24− 24S 2.1A		24	2.1	84	89
QDU(QDS) 48−3.3S 12A	48 (32～72)	3.3	12	81	86
QDU(QDS) 48− 5S 10A		5	10	83	88
QDU(QDS) 48− 6S 8.4A		6	8.4	83	88
QDU(QDS) 48− 12S 4.2A		12	4.2	85	90
QDU(QDS) 48− 15S 3.3A		15	3.3	85	90
QDU(QDS) 48− 24S 2.1A		24	2.1	79	89
QDU(QDS)100−3.3S 12A	100 (64～144)	3.3	12	82	87
QDU(QDS)100− 5S 10A		5	10	84	89
QDU(QDS)100− 6S 8.4A		6	8.4	84	89
QDU(QDS)100− 12S 4.2A		12	4.2	85	90
QDU(QDS)100− 15S 3.3A		15	3.3	85	90
QDU(QDS)100− 24S 2.1A		24	2.1	79	89

＊上記仕様以外にも対応可能ですのでお問い合わせ下さい。
Please consult with us about other specification.

■ Block Diagram

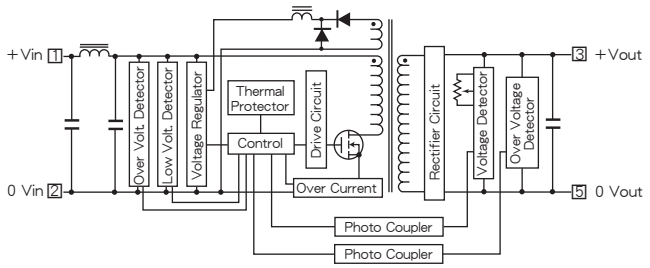

■ Characteristic Curves

Fig. 1 Derating Curve

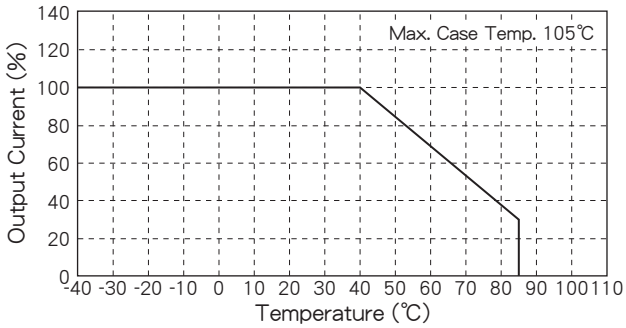

Fig. 2 Short Circuit Operating Area

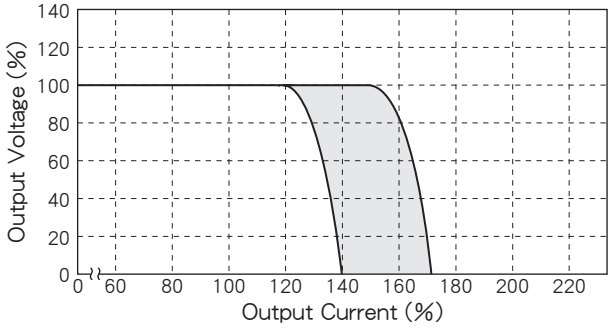

Fig. 3 Temperature Characteristic on Case Surface

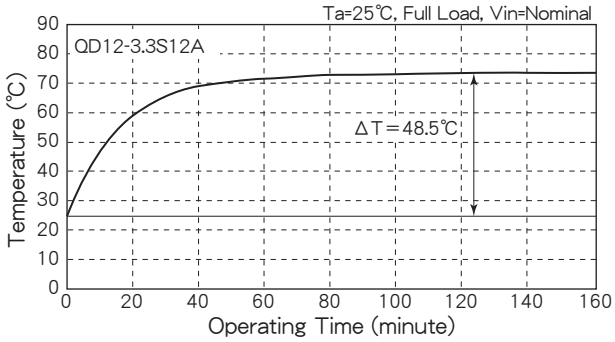

Fig. 4 Efficiency vs. Output Current

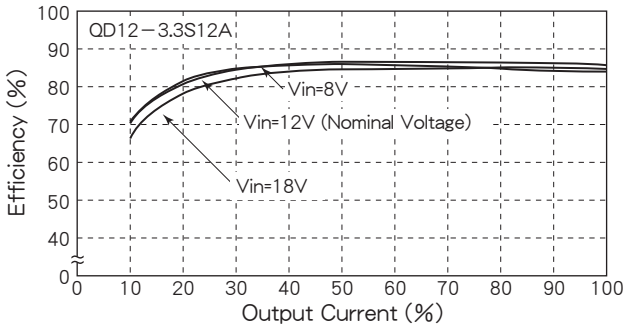

Fig. 5 Efficiency vs. Output Current

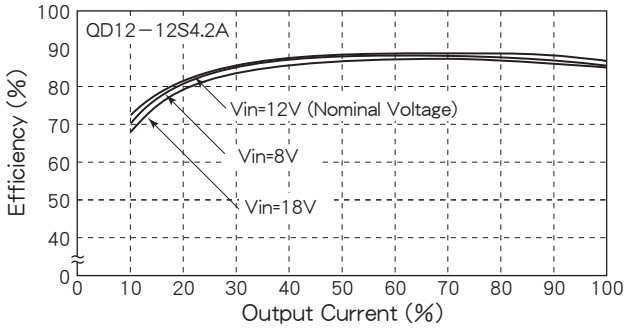

Fig. 6 Efficiency vs. Output Current

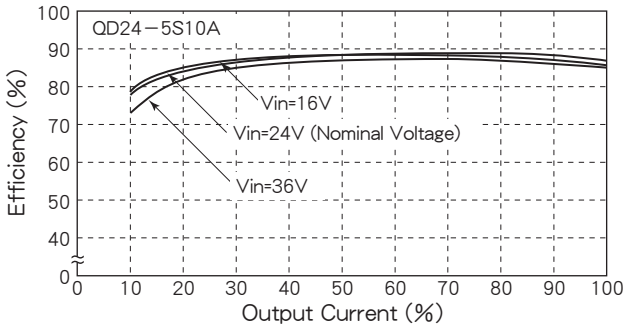

Fig. 7 Efficiency vs. Output Current

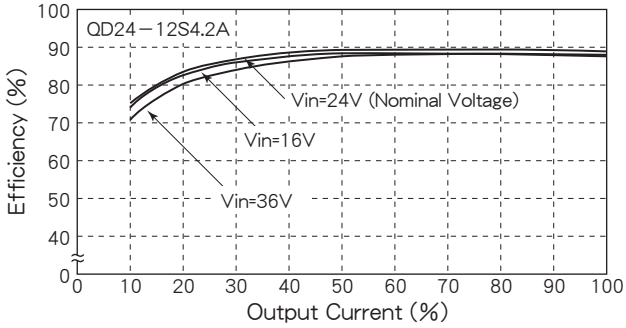

Fig. 8 Efficiency vs. Output Current

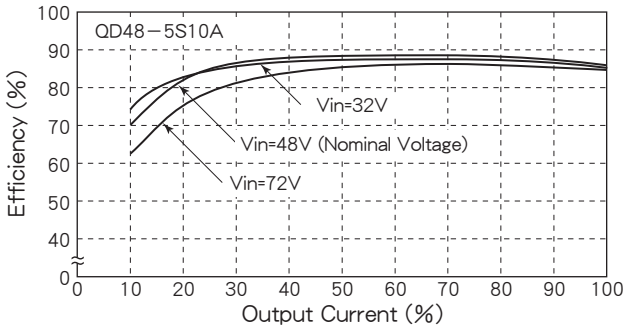

Fig. 9 Efficiency vs. Output Current

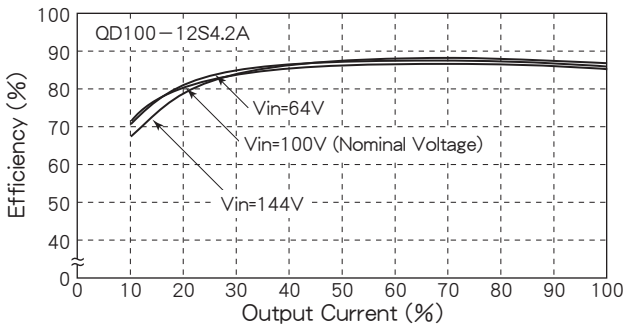

BTS SERIES

80～100W DC/DC CONVERTERS Single Output

H12.8×W50×L118 (mm)

■ Terminal Outs & Dimensions (±0.5mm)

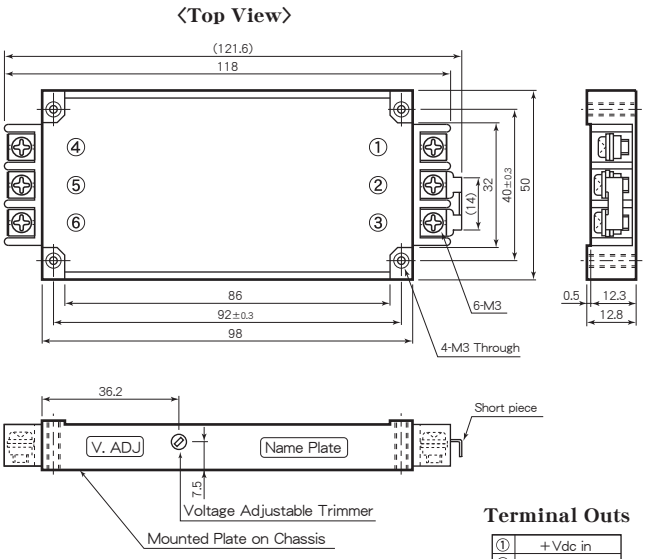

Terminal Outs

①	+Vdc in
②	0 Vdc in
③	ON/OFF Control
④	+Vdc out
⑤	0 Vdc out
⑥	No Connection

■ Features

- ●Low Profile 12.8mm
- ●Built-in Input Filter
- ●Input-Output Isolation
- ●High Efficiency 88～91%
- ●Wide Input Voltage Range
- ●High Reliability
- ●6 Sided Metal Shielding
- ●Remote ON/OFF Control
- ●Adjustable Output Voltage ±5%
- ●Input Low Voltage Protection
- ●Input Over Voltage Protection
- ●Output Over Voltage Protection 115～140% Operation
- ●Thermal Protection +110℃～+120℃
- ●Operating Ambient Temperature −40℃～+85℃
- ●Max. Case Temperature +105℃
- ●Conformity to RoHS2 Directive
- ●Not built-in aluminum and tantalum electrolytic capacitor

- ●薄型 12.8mm
- ●入力フィルタ内蔵
- ●入出力間絶縁
- ●高効率 88～91%
- ●広範囲な入力電圧
- ●高信頼性
- ●６面メタルシールド
- ●ﾘﾓｰﾄON/OFFｺﾝﾄﾛｰﾙ
- ●可変出力電圧 ±5%
- ●入力低電圧保護回路内蔵
- ●入力過電圧保護回路内蔵
- ●出力過電圧保護回路内蔵 115～140% 動作
- ●過熱保護回路内蔵 +110℃～+120℃
- ●動作周囲温度 −40℃～+85℃
- ●最大ケース温度 +105℃
- ●RoHS2指令対応
- ●アルミ電解コンデンサ及び タンタルコンデンサ不使用

■ Selection Guide

Table 1

Model Number	Input Volt. (Range) (V. DC)	Output Voltage (V. DC)	Output Current (A)	Efficiency (Typical)(%) 20% Load	80% Load
BTS 12−3.3S 24 A	12 (8～18)	3.3	24	88	88
BTS 12− 5S 20 A		5	20	87	89
BTS 12− 6S 16.7A		6	16.7	87	89
BTS 12− 12S 8.4 A		12	8.4	87	89
BTS 12− 15S 6.7 A		15	6.7	86	89
BTS 12− 24S 4.2 A		24	4.2	85	89
BTS 24−3.3S 24 A	24 (16～36)	3.3	24	88	88
BTS 24− 5S 20 A		5	20	88	90
BTS 24− 6S 16.7A		6	16.7	88	90
BTS 24− 12S 8.4 A		12	8.4	86	90
BTS 24− 15S 6.7 A		15	6.7	86	90
BTS 24− 24S 4.2 A		24	4.2	86	90
BTS 48−3.3S 24 A	48 (32～72)	3.3	24	87	88
BTS 48− 5S 20 A		5	20	87	90
BTS 48− 6S 16.7A		6	16.7	87	90
BTS 48− 12S 8.4 A		12	8.4	87	91
BTS 48− 15S 6.7 A		15	6.7	86	91
BTS 48− 24S 4.2 A		24	4.2	86	91
BTS100−3.3S 24 A	100 (64～144)	3.3	24	85	88
BTS100− 5S 20 A		5	20	86	90
BTS100− 6S 16.7A		6	16.7	86	90
BTS100− 12S 8.4 A		12	8.4	86	91
BTS100− 15S 6.7 A		15	6.7	86	91
BTS100− 24S 4.2 A		24	4.2	86	89

※ 上記仕様以外にも対応可能ですので お問い合わせ下さい。
Please consult with us about other specification.

■ General Characteristics

(at Ta : 25℃, Full Load, Nominal Vin)

- ●Input Voltage, Range — DC12, 24, 48, 100V (See Table 1)
- ●Output Voltage, Current — See Table 1
- ●Output Voltage Range — ±5% Adjustable
- ●Efficiency — See Table 1
- ●Line Regulation — ±0.3% max. (at Vin Range)
- ●Load Regulation — ±0.5% max. (0～100% Load)
- ●Reflected Input Ripple, Noise — (3% Vin) Vp-p max.
- ●Output Ripple — 40mVp-p max.
- ●Output Noise — 100mVp-p max.
- ●Short Circuit Protection — Built-in, Auto-restart (See Fig. 2)
- ●Over Voltage Protection — 115～140% Output Voltage
- ●Remote ON/OFF Control — ON : Short or 0～0.8V; OFF : Open or 2～10V (Between terminal ② ～ ③)
- ●Temperature Coefficient — 0.02%/℃ max.
- ●Operating Ambient Temp. — −40℃～+85℃ (See Fig. 1)
- ●Max. Case Temperature — +105℃
- ●Storage Temperature — −55℃～+125℃
- ●Isolation Voltage — AC1500V 1 min. AC2000V 1 min. (100V Vin only) (Input−Output−Case)
- ●Isolation Impedance — 100MΩ min. (at DC1000V) (Input−Output−Case)
- ●Weight — Main Body : 170g max.
- ●Humidity — 20～95% RH
- ●Shock — 490m/s² (11msec 3directions)
- ●Vibration — 10～55Hz 98m/s² (30minutes 3directions)
- ●Surface Structure — 6 Sided Aluminum Case
- ●MTBF — 400,000H (Ta : 25℃, 80% Load, Nominal Vin)
- ●Warranty — 5 years

■ Block Diagram

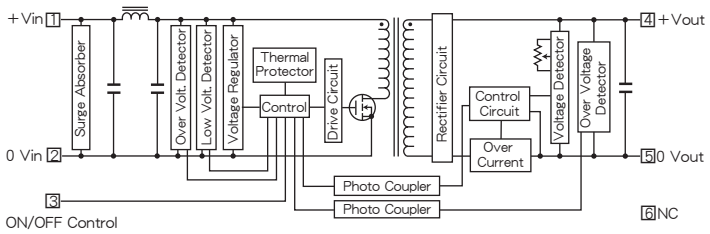

■ Characteristic Curves

Fig. 1 Derating Curve

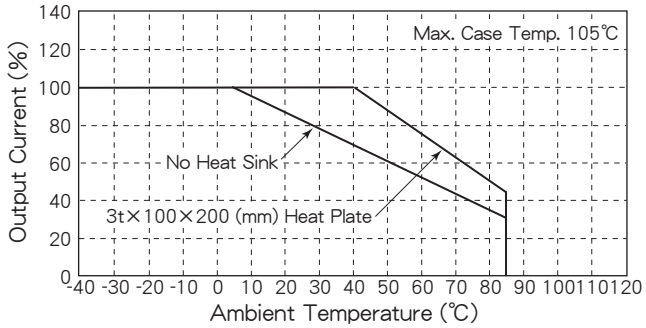

Fig. 2 Short Circuit Operating Area

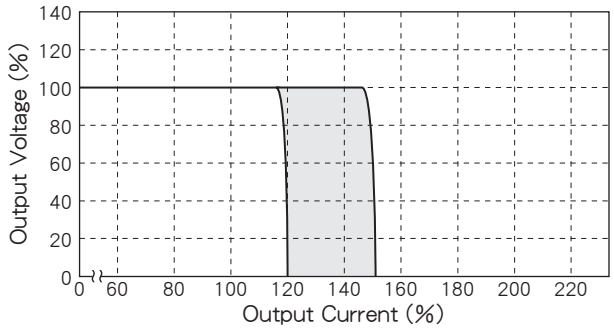

Fig. 3 Temperature Characteristic on Case Surface

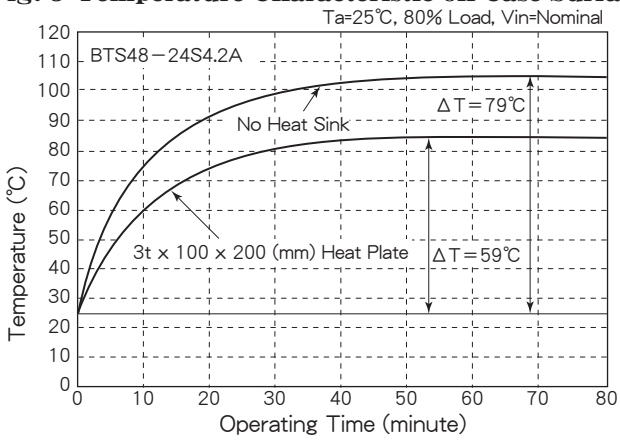

Fig. 4 Efficiency vs. Output Current

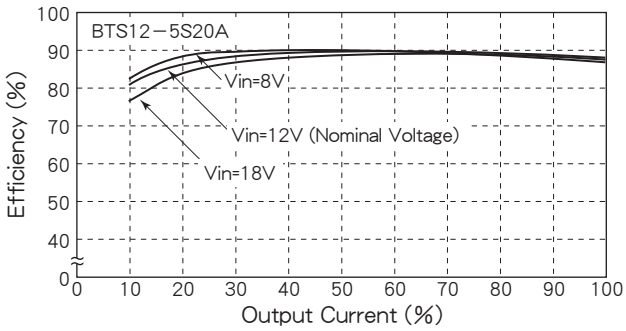

Fig. 5 Efficiency vs. Output Current

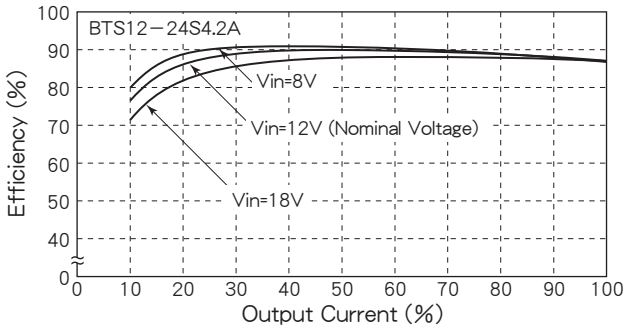

Fig. 6 Efficiency vs. Output Current

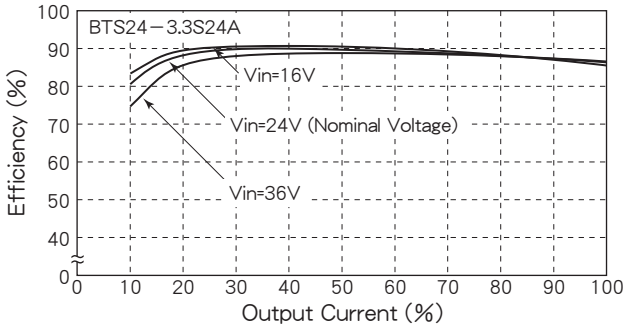

Fig. 7 Efficiency vs. Output Current

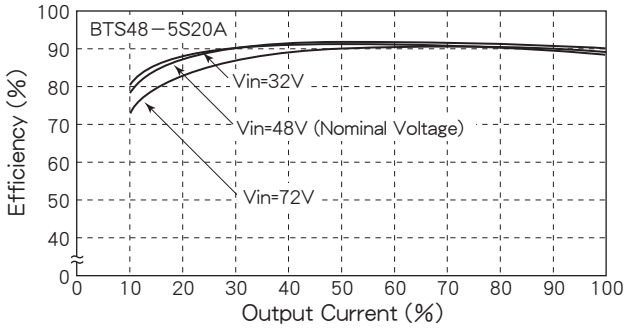

Fig. 8 Efficiency vs. Output Current

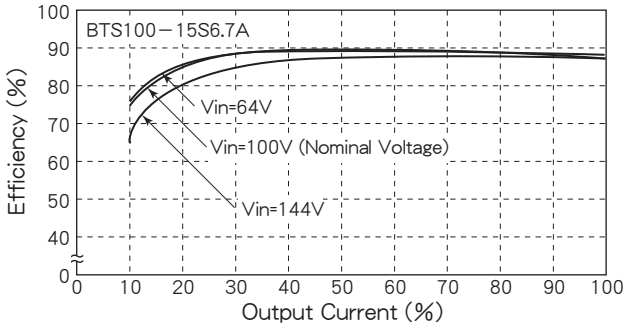

BTM SERIES

80～100W DC/DC CONVERTERS Single Output

H12.8×W50×L118 (mm)

■ Features

- ●Low Profile 12.8mm ●薄型 12.8mm
- ●Built-in Input Filter ●入力フィルタ内蔵
- ●Input-Output Isolation ●入出力間絶縁
- ●High Efficiency 88～91% ●高効率 88～91%
- ●Wide Input Voltage Range ●広範囲な入力電圧
- ●High Reliability ●高信頼性
- ●6 Sided Metal Shielding ●６面メタルシールド
- ●Remote ON/OFF Control ●ﾘﾓｰﾄON/OFFｺﾝﾄﾛｰﾙ
- ●Adjustable Output Voltage ±5% ●可変出力電圧 ±5%
- ●Input Low Voltage Protection ●入力低電圧保護回路内蔵
- ●Input Over Voltage Protection ●入力過電圧保護回路内蔵
- ●Output Over Voltage Protection 115～140% Operation ●出力過電圧保護回路内蔵 115～140% 動作
- ●Thermal Protection ＋110℃～＋120℃ ●過熱保護回路内蔵 ＋110℃～＋120℃
- ●Operating Ambient Temperature －40℃～＋85℃ ●動作周囲温度 －40℃～＋85℃
- ●Max. Case Temperature ＋105℃ ●最大ケース温度 ＋105℃
- ●Conformity to RoHS2 Directive ●RoHS2指令対応
- ●Not built-in aluminum and tantalum electrolytic capacitor ●アルミ電解コンデンサ及びタンタルコンデンサ不使用

■ General Characteristics

(at Ta : 25℃, Full Load, Nominal Vin)

●Input Voltage, Range	DC12, 24, 48, 100V (See Table 1)
●Output Voltage, Current	See Table 1
●Output Voltage Range	±5% Adjustable
●Efficiency	See Table 1
●Line Regulation	±0.3% max. (at Vin Range)
●Load Regulation	±0.5% max. (0～100% Load)
●Reflected Input Ripple, Noise	(3% Vin) Vp-p max.
●Output Ripple	40mVp-p max.
●Output Noise	100mVp-p max.
●Short Circuit Protection	Built-in, Auto-restart (See Fig. 2)
●Over Voltage Protection	115～140% Output Voltage
●Remote ON/OFF Control	ON : Short or 0～0.8V OFF : Open or 2～10V (Between terminal ② ～ ③)
●Temperature Coefficient	0.02%/℃ max.
●Operating Ambient Temp.	－40℃～＋85℃ (See Fig. 1)
●Max. Case Temperature	＋105℃
●Storage Temperature	－55℃～＋125℃
●Isolation Voltage	AC1500V 1 min. AC2000V 1 min. (100V Vin only) (Input－Output－Case)
●Isolation Impedance	100MΩ min. (at DC1000V) (Input－Output－Case)
●Weight	Main Body : 170g max. Heat Sink : 73g max.
●Humidity	20～95% RH
●Shock	490m/s² (11msec 3directions)
●Vibration	10～55Hz 98m/s² (30minutes 3directions)
●Surface Structure	6 Sided Aluminum Case
●MTBF	400,000H (Ta : 25℃, 80% Load, Nominal Vin)
●Warranty	5 years

■ Terminal Outs & Dimensions (±0.5mm)

〈Top View〉

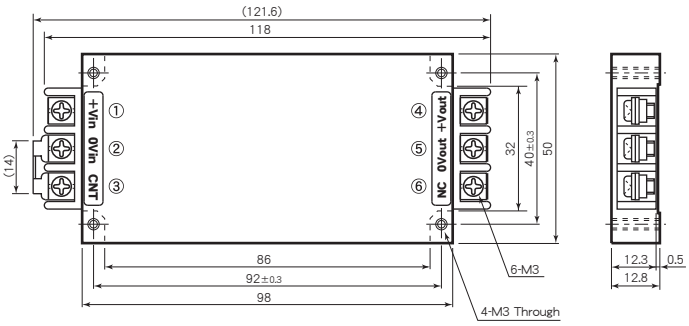

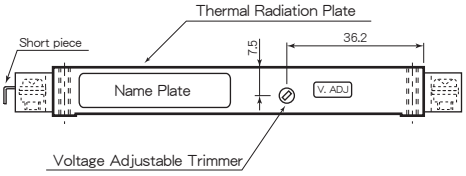

Terminal Outs

①	＋Vdc in
②	0 Vdc in
③	ON/OFF Control
④	＋Vdc out
⑤	0 Vdc out
⑥	No Connection

■ Option Heat Sink

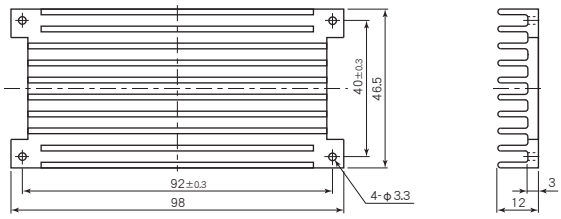

＊Option Heat Sink Model : A3-13986

■ Selection Guide

Table 1

Model Number	Input Volt. (Range) (V. DC)	Output Voltage (V. DC)	Output Current (A)	Efficiency (Typical)(%) 20% Load	80% Load
BTM 12－3.3S 24 A	12 (8～18)	3.3	24	88	88
BTM 12－ 5S 20 A		5	20	87	89
BTM 12－ 6S 16.7A		6	16.7	87	89
BTM 12－ 12S 8.4 A		12	8.4	87	89
BTM 12－ 15S 6.7 A		15	6.7	86	89
BTM 12－ 24S 4.2 A		24	4.2	85	89
BTM 24－3.3S 24 A	24 (16～36)	3.3	24	88	88
BTM 24－ 5S 20 A		5	20	88	90
BTM 24－ 6S 16.7A		6	16.7	88	90
BTM 24－ 12S 8.4 A		12	8.4	86	90
BTM 24－ 15S 6.7 A		15	6.7	86	90
BTM 24－ 24S 4.2 A		24	4.2	86	90
BTM 48－3.3S 24 A	48 (32～72)	3.3	24	87	88
BTM 48－ 5S 20 A		5	20	87	90
BTM 48－ 6S 16.7A		6	16.7	87	90
BTM 48－ 12S 8.4 A		12	8.4	87	91
BTM 48－ 15S 6.7 A		15	6.7	86	91
BTM 48－ 24S 4.2 A		24	4.2	86	91
BTM100－3.3S 24 A	100 (64～144)	3.3	24	85	88
BTM100－ 5S 20 A		5	20	86	90
BTM100－ 6S 16.7A		6	16.7	86	90
BTM100－ 12S 8.4 A		12	8.4	86	91
BTM100－ 15S 6.7 A		15	6.7	86	91
BTM100－ 24S 4.2 A		24	4.2	86	89

※ 上記仕様以外にも対応可能ですので お問い合わせ下さい。
Please consult with us about other specification.

■ Block Diagram

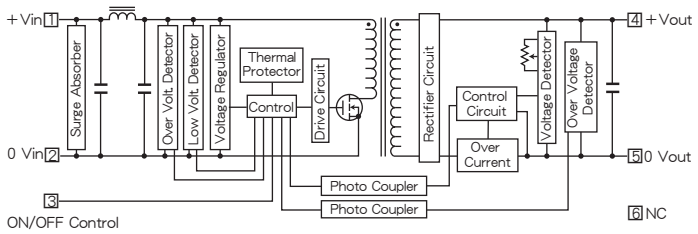

■ Characteristic Curves

Fig. 1 Derating Curve

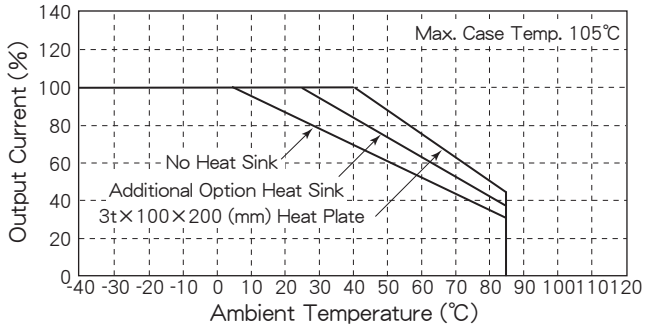

Fig. 2 Short Circuit Operating Area

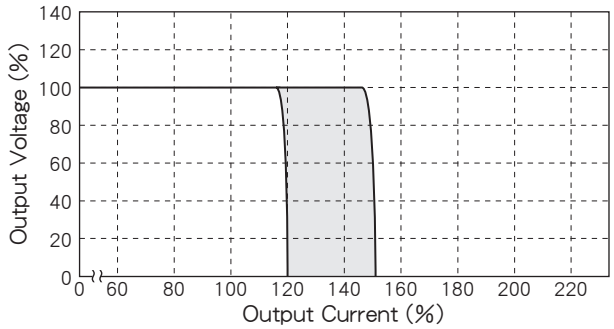

Fig. 3 Temperature Characteristic on Case Surface

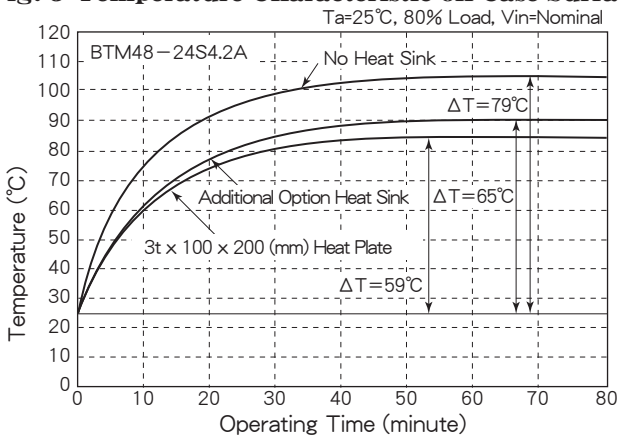

Fig. 4 Efficiency vs. Output Current

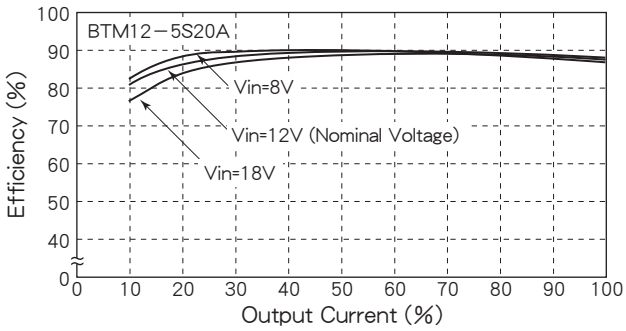

Fig. 5 Efficiency vs. Output Current

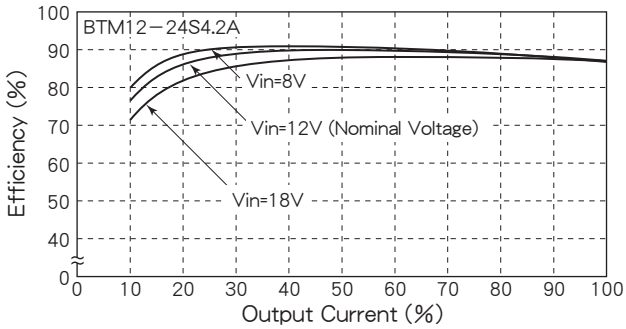

Fig. 6 Efficiency vs. Output Current

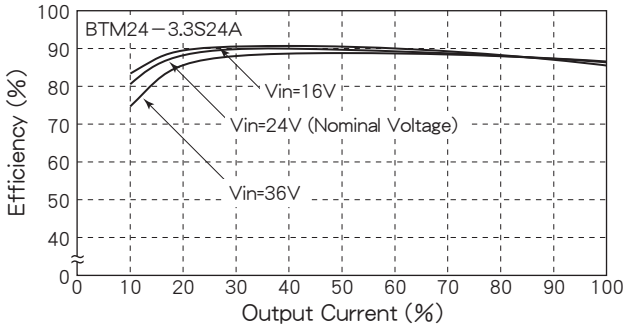

Fig. 7 Efficiency vs. Output Current

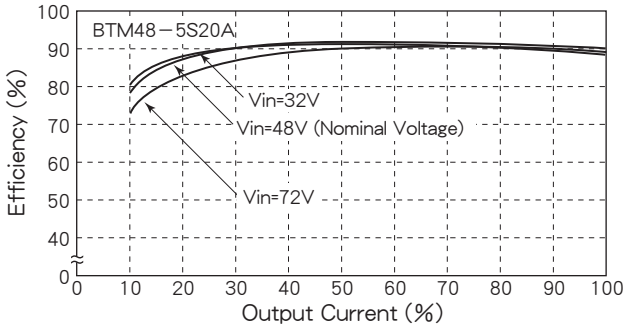

Fig. 8 Efficiency vs. Output Current

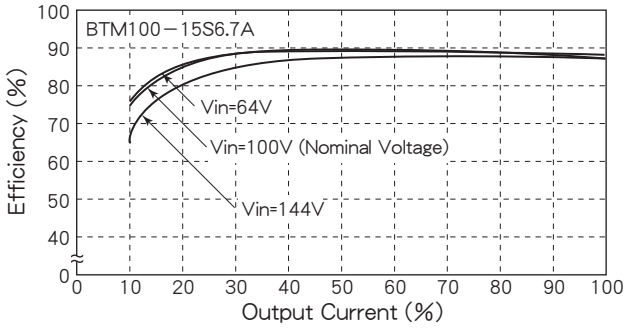

FD SERIES

80～100W DC/DC CONVERTERS Single Output

FDU type

H20×W60×L120 (mm)

FDS type

H20×W60×L120 (mm)

■ Features

- ●Built-in Input Filter
- ●Input-Output Isolation
- ●High Efficiency 85～92%
- ●Wide Input Voltage Range
- ●High Reliability
- ●Long Life by Mounting on Chassis or Using Heat Sink
- ●Adjustable Output Voltage ±5%
- ●Input Low Voltage Protection
- ●Input Over Voltage Protection
- ●Output Over Voltage Protection
- ●Thermal Protection ＋110℃～＋120℃
- ●Operating Ambient Temperature －40℃～＋85℃
- ●Conformity to RoHS2 Directive
- ●Not built-in aluminum and tantalum electrolytic capacitor

- ●入力フィルタ内蔵
- ●入出力間絶縁
- ●高効率 85～92%
- ●広範囲な入力電圧
- ●高信頼性
- ●シャーシや放熱板への取り付けにより長寿命化
- ●可変出力電圧 ±5%
- ●入力低電圧保護回路内蔵
- ●入力過電圧保護回路内蔵
- ●出力過電圧保護回路内蔵
- ●過熱保護回路内蔵 ＋110℃～＋120℃
- ●動作周囲温度 －40℃～＋85℃
- ●RoHS2指令対応
- ●アルミ電解コンデンサ及びタンタルコンデンサ不使用

■ General Characteristics

(at Ta：25℃, Full Load, Nominal Vin)

●Input Voltage, Range	DC12, 24, 48, 100, 140V (See Table 1)
●Output Voltage, Current	See Table 1
●Output Voltage Range	±5% Adjustable
●Efficiency	See Table 1
●Line Regulation	±0.3% max. (at Vin Range)
●Load Regulation	±0.5% max. ±1% max. (3.3, 5V Vout only) (0～100% Load)
●Reflected Input Ripple, Noise	(5% Vin) Vp-p max.
●Output Ripple	40mVp-p max.
●Output Noise	(0.5% Vout+100mV) p-p max.
●Short Circuit Protection	Built-in, Auto-restart (See Fig. 2)
●Over Voltage Protection	115～140% Output Voltage
●Temperature Coefficient	0.02%/℃ max.
●Operating Ambient Temp.	－40℃～＋85℃ (See Fig. 1)
●Max. Case Temperature	＋105℃
●Storage Temperature	－55℃～＋125℃
●Isolation Voltage	AC2000V one minute (Input－Output－Case)
●Isolation Impedance	100MΩ min. (at DC1000V) (Input－Output－Case)
●Weight	350g max.
●Humidity	20～95% RH
●Shock	490m/s² (11msec 3directions)
●Vibration	10～55Hz 98m/s² (30minutes 3directions)
●Surface Structure	Aluminum Case
●MTBF	400,000H (Ta：25℃, 80% Load, Nominal Vin)
●Warranty	5 years

■ Terminal Outs & Dimensions (±0.5mm)

FDU type

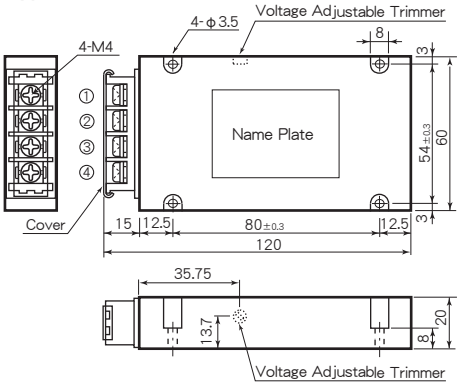

Terminal Outs

①	＋Vdc in
②	0 Vdc in
③	＋Vdc out
④	0 Vdc out

⊘ Voltage Adjustable Trimmer

FDS type

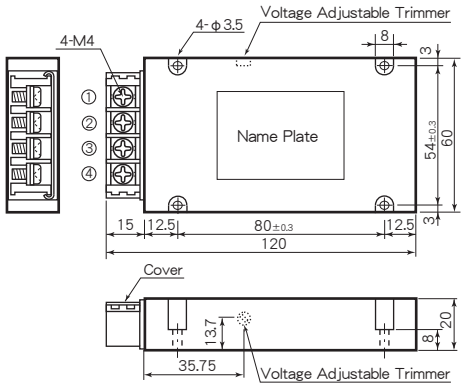

Terminal Outs

①	＋Vdc in
②	0 Vdc in
③	＋Vdc out
④	0 Vdc out

⊘ Voltage Adjustable Trimmer

■ Selection Guide

Table 1

Model Number	Input Volt. (Range) (V. DC)	Output Voltage (V. DC)	Output Current (A)	Efficiency (Typical)(%) 20% Load	80% Load
FDU(FDS) 12－ 3.3S 24A	12 (8～18)	3.3	24	85	85
FDU(FDS) 12－ 5S 20A		5	20	87	89
FDU(FDS) 12－ 6S 16.7A		6	16.7	87	89
FDU(FDS) 12－ 12S 8.4A		12	8.4	88	90
FDU(FDS) 12－13.8S 7.2A		13.8	7.2	88	89
FDU(FDS) 12－ 15S 6.7A		15	6.7	88	89
FDU(FDS) 12－ 24S 4.2A		24	4.2	88	89
FDU(FDS) 24－ 3.3S 24A	24 (16～36)	3.3	24	88	90
FDU(FDS) 24－ 5S 20A		5	20	88	91
FDU(FDS) 24－ 6S 16.7A		6	16.7	88	91
FDU(FDS) 24－ 12S 8.4A		12	8.4	88	91
FDU(FDS) 24－13.8S 7.2A		13.8	7.2	88	91
FDU(FDS) 24－ 15S 6.7A		15	6.7	88	91
FDU(FDS) 24－ 24S 4.2A		24	4.2	88	91
FDU(FDS) 48－ 3.3S 24A	48 (32～72)	3.3	24	87	88
FDU(FDS) 48－ 5S 20A		5	20	89	92
FDU(FDS) 48－ 6S 16.7A		6	16.7	88	92
FDU(FDS) 48－ 12S 8.4A		12	8.4	88	91
FDU(FDS) 48－13.8S 7.2A		13.8	7.2	88	91
FDU(FDS) 48－ 15S 6.7A		15	6.7	88	91
FDU(FDS) 48－ 24S 4.2A		24	4.2	88	91
FDU(FDS)100－ 3.3S 24A	100 (64～144)	3.3	24	87	88
FDU(FDS)100－ 5S 20A		5	20	88	90
FDU(FDS)100－ 6S 16.7A		6	16.7	88	90
FDU(FDS)100－ 12S 8.4A		12	8.4	88	91
FDU(FDS)100－13.8S 7.2A		13.8	7.2	88	91
FDU(FDS)100－ 15S 6.7A		15	6.7	88	91
FDU(FDS)100－ 24S 4.2A		24	4.2	88	91
FDU(FDS)140－ 3.3S 24A	140 (90～200)	3.3	24	87	88
FDU(FDS)140－ 5S 20A		5	20	88	90
FDU(FDS)140－ 6S 16.7A		6	16.7	88	90
FDU(FDS)140－ 12S 8.4A		12	8.4	88	91
FDU(FDS)140－13.8S 7.2A		13.8	7.2	88	91
FDU(FDS)140－ 15S 6.7A		15	6.7	88	91
FDU(FDS)140－ 24S 4.2A		24	4.2	88	91

＊上記仕様以外にも対応可能ですのでお問い合わせください。
Please consult with us about other specification.

■ Block Diagram

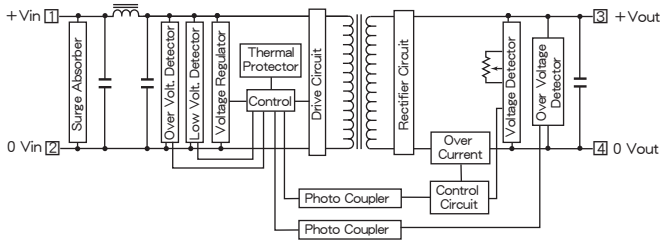

■ Characteristic Curves

Fig. 1 Derating Curve

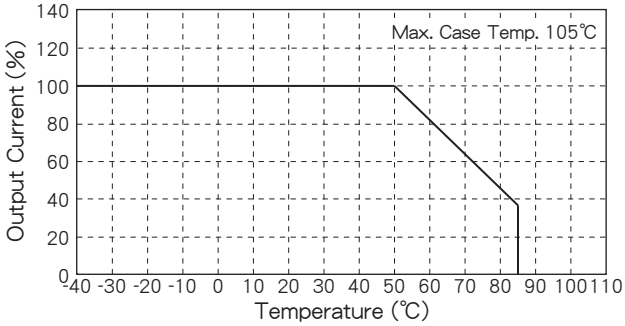

Fig. 2 Short Circuit Operating Area

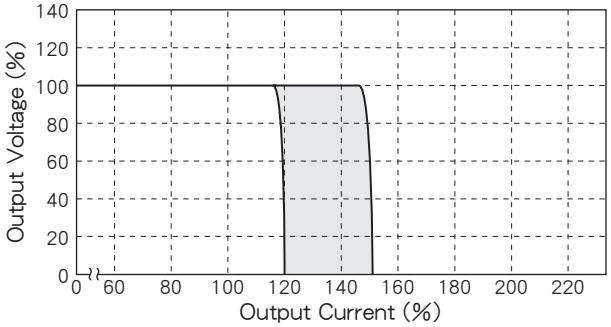

Fig. 3 Efficiency vs. Output Current

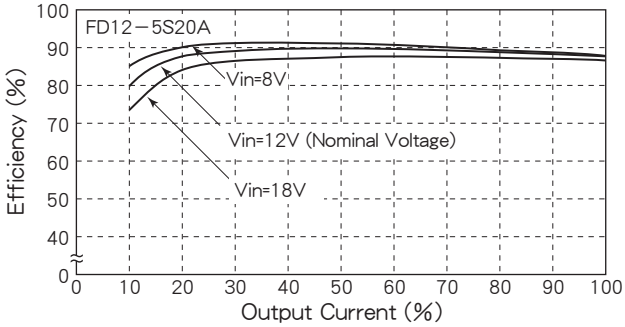

Fig. 4 Efficiency vs. Output Current

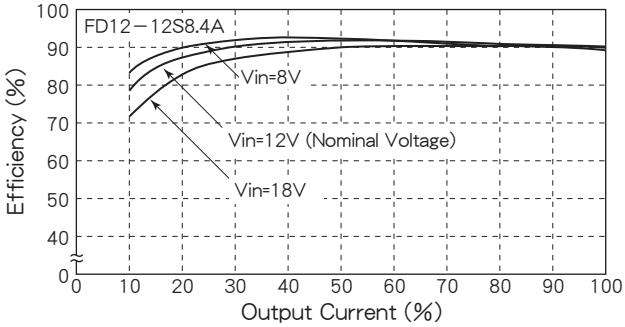

Fig. 5 Efficiency vs. Output Current

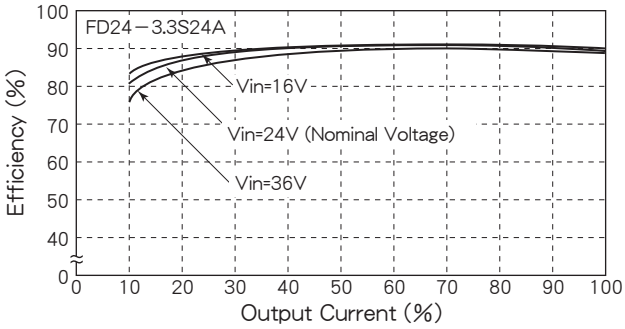

Fig. 6 Efficiency vs. Output Current

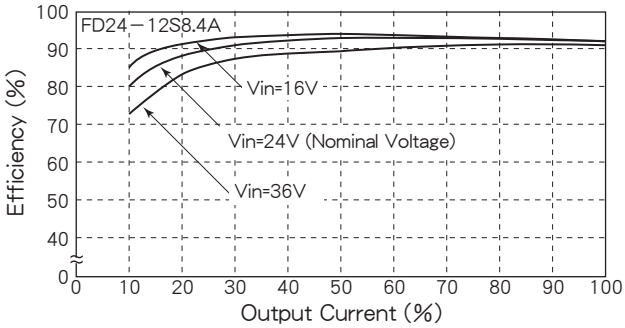

Fig. 7 Efficiency vs. Output Current

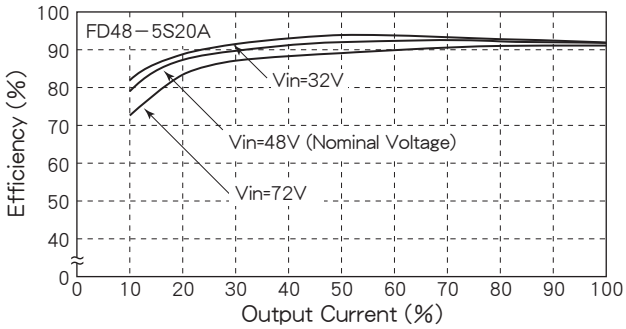

Fig. 8 Efficiency vs. Output Current

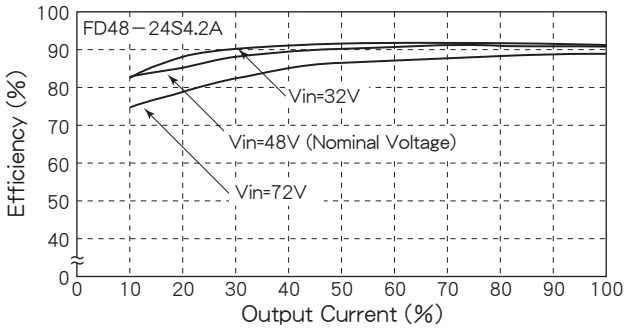

Fig. 9 Efficiency vs. Output Current

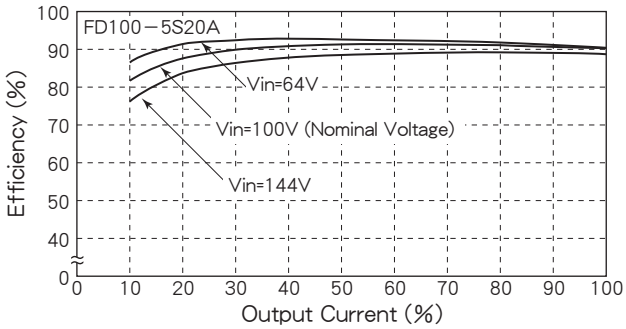

PD SERIES

85～110W DC/DC CONVERTERS
Single Output

H35×W70×L158 (mm)

■ Features

- ●Wide Input Voltage Range
- ●High Efficiency 83%～90%
- ●Input-Output Isolation (AC2000V)
- ●Low Output Ripple and Noise
- ●Long Life by mounting on Chassis or Using Heat Sink
- ●Input Low Voltage Protection
- ●Input Over Voltage Protection
- ●Output Over Voltage Protection 120%～140% Operation
- ●Operating Ambient Temp. −25℃～+71℃
- ●Max. Case Temperature+85℃
- ●Conformity to RoHS2 Directive

- ●広範囲な入力電圧範囲
- ●高効率 83%～90%
- ●入出力間絶縁 (AC2000V)
- ●出力ﾘｯﾌﾟﾙ,ﾉｲｽﾞが小さい
- ●シャーシや放熱板への取付により長寿命化
- ●入力低電圧保護回路内蔵
- ●入力過電圧保護回路内蔵
- ●出力過電圧保護回路内蔵 120%～140%動作
- ●動作周囲温度 −25℃～+71℃
- ●最大ケース温度+85℃
- ●RoHS2指令対応

■ General Characteristics

(at Ta : 25℃, Full Load, Nominal Vin)

●Input Voltage, Range	DC12, 24, 48, 96V (See Table 1)
●Output Voltage, Current	See Table 1
●Output Voltage Adjustment	±5%
●Efficiency	See Table 1
●Line Regulation	0.1% max. (at Vin Range)
●Load Regulation	1% max. (0～100% Load)
●Output Ripple	(0.1% Vout+50mV) p-p max.
●Output Noise	(0.5% Vout+50mV) p-p max.
●Short Circuit Protection	Built-in, Auto-restart (See Fig. 2)
●Output Over Voltage Protection	Built-in, Shut-down (120%～140% Vout)
●Temperature Coefficient	0.02%/℃ max.
●Operating Ambient Temp.	−25℃～+71℃ (See Fig. 1)
●Max. Case Temp.	+85℃
●Storage Temp.	−40℃～+85℃
●Isolation Voltage	AC2000V one minute (Input−Output−Case)
●Isolation Impedance	100MΩ min. (at DC1000V) (Input−Output−Case)
●Weight	Main Body : 800g max. Pair Heat Sinks : 250g max.
●Humidity	20～95% RH
●Shock	490m/s² (11msec 3directions)
●Vibration	10～55Hz 98m/s² (30minutes 3directions)
●Surface Structure	Aluminum Case
●MTBF	120,000H (Ta : 25℃, 80% Load, Nominal Vin)
●Warranty	5 years

■ Terminal Outs & Dimensions (±0.5mm)

〈Top View〉

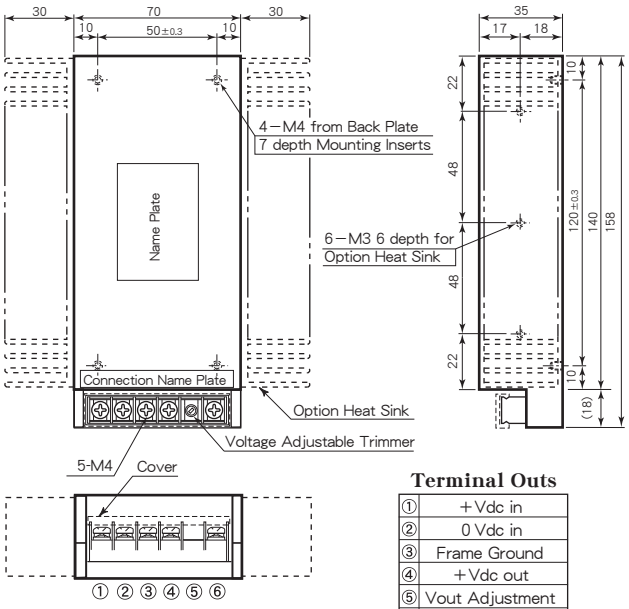

＊Option Heat Sink Model : A3-3664

Terminal Outs

①	+Vdc in
②	0 Vdc in
③	Frame Ground
④	+Vdc out
⑤	Vout Adjustment
⑥	0 Vdc out

■ Selection Guide

Table 1

Model Number	Input Volt. (Range) (V. DC)	Output Voltage (V. DC)	Output Current (A)	Efficiency (typ.) (%)
PD12 - 3.3S 26A	12 (6～18) at 50% Load (8～18) at 100% Load	3.3	26	83
PD12 - 5S 20A		5	20	85
PD12 - 12S 8.3A		12	8.3	85
PD12 -13.8S 7.3A		13.8	7.3	85
PD12 - 15S 7A		15	7	85
PD12 - 24S 4.5A		24	4.5	86
PD12 - 48S 2.3A		48	2.3	88
PD12 - 100S 1.1A		100	1.1	90
PD12 - 140S 0.8A		140	0.8	90
PD12 - 200S 0.55A		200	0.55	90
PD12 - 300S 0.36A		300	0.36	90
PD24 - 3.3S 26A	24 (14～40) at 50% Load (17～40) at 100% Load	3.3	26	83
PD24 - 5S 20A		5	20	85
PD24 - 12S 8.3A		12	8.3	86
PD24 -13.8S 7.3A		13.8	7.3	86
PD24 - 15S 7A		15	7	86
PD24 - 24S 4.5A		24	4.5	88
PD24 - 48S 2.3A		48	2.3	89
PD24 - 100S 1.1A		100	1.1	90
PD24 - 140S 0.8A		140	0.8	90
PD24 - 200S 0.55A		200	0.55	90
PD24 - 300S 0.36A		300	0.36	90
PD48 - 3.3S 26A	48 (28～80) at 50% Load (34～80) at 100% Load	3.3	26	83
PD48 - 5S 20A		5	20	85
PD48 - 12S 8.3A		12	8.3	85
PD48 -13.8S 7.3A		13.8	7.3	86
PD48 - 15S 7A		15	7	86
PD48 - 24S 4.5A		24	4.5	88
PD48 - 48S 2.3A		48	2.3	89
PD48 - 100S 1.1A		100	1.1	90
PD48 - 140S 0.8A		140	0.8	90
PD48 - 200S 0.55A		200	0.55	90
PD48 - 300S 0.36A		300	0.36	90
PD96 - 3.3S 26A	96 (56～160) at 50% Load (68～160) at 100% Load	3.3	26	83
PD96 - 5S 20A		5	20	87
PD96 - 12S 8.3A		12	8.3	85
PD96 -13.8S 7.3A		13.8	7.3	86
PD96 - 15S 7A		15	7	86
PD96 - 24S 4.5A		24	4.5	88
PD96 - 48S 2.3A		48	2.3	89
PD96 - 100S 1.1A		100	1.1	90
PD96 - 140S 0.8A		140	0.8	90
PD96 - 200S 0.55A		200	0.55	90
PD96 - 300S 0.36A		300	0.36	90

※ 上記仕様以外にも対応可能ですので お問い合わせ下さい。
Please consult with us about other specification.

■ Block Diagram

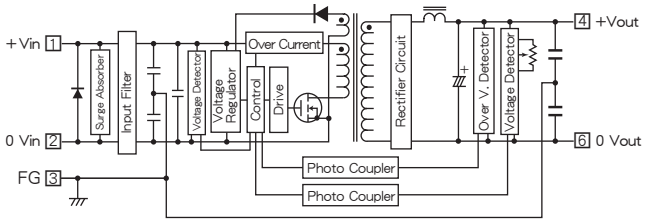

■ Characteristic Curves

Fig. 1 Derating Curve

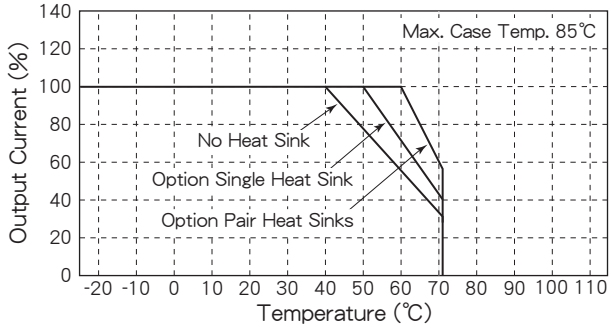

Fig. 2 Short Circuit Operating Area

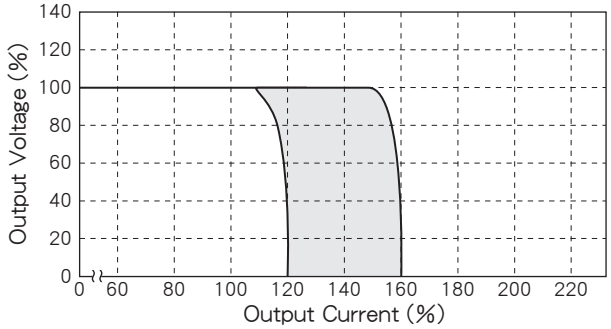

Fig. 3 Temperature Characteristic on Case Surface

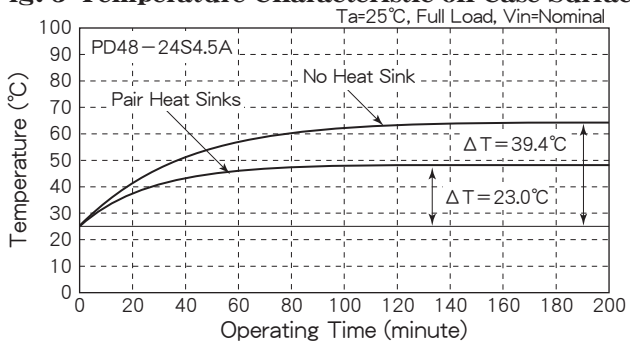

Fig. 4 Efficiency vs. Output Current

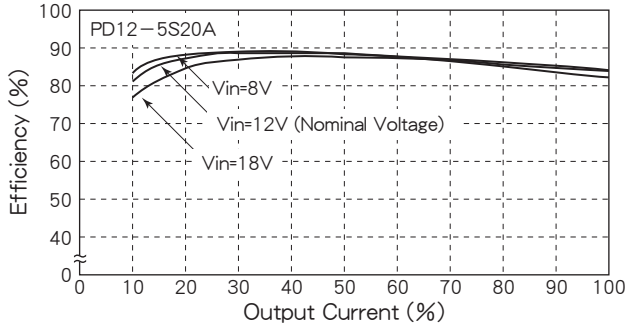

Fig. 5 Efficiency vs. Output Current

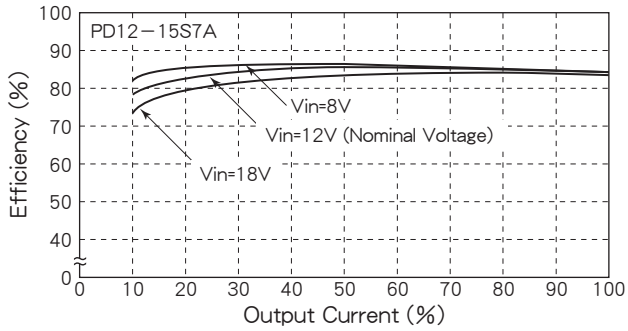

Fig. 6 Efficiency vs. Output Current

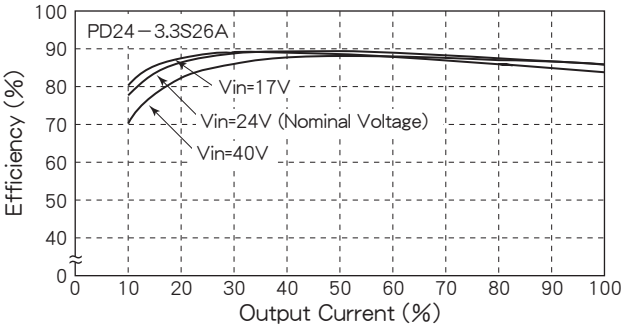

Fig. 7 Efficiency vs. Output Current

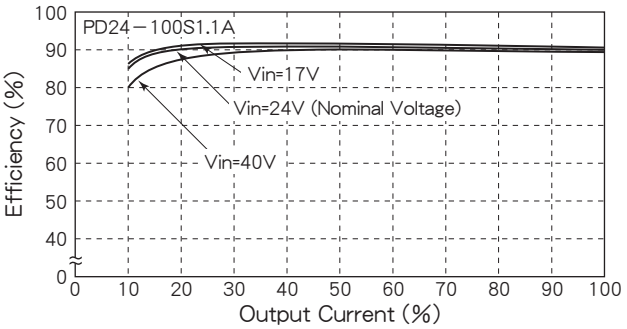

Fig. 8 Efficiency vs. Output Current

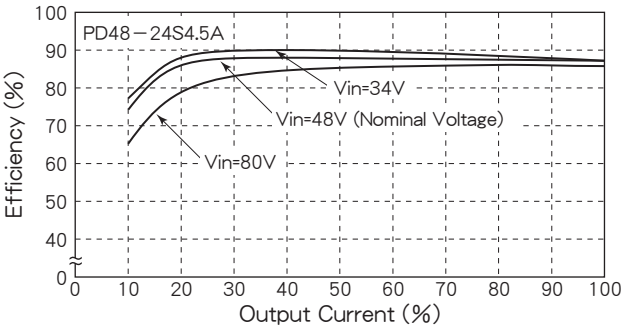

Fig. 9 Efficiency vs. Output Current

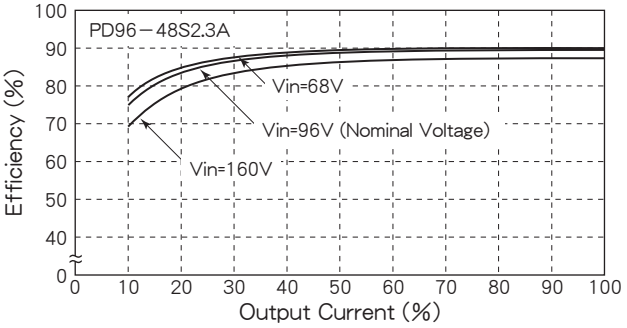

FM SERIES

105～200W DC/DC CONVERTERS
並列運転可能 Parallel Operation

FMU type

H20×W60×L120 (mm)

FMS type

H20×W60×L120 (mm)

■ Option Heat Sink

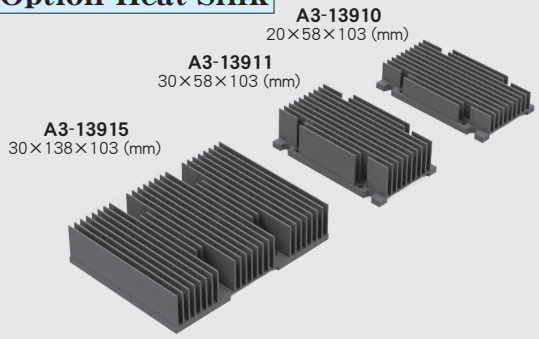

■ Features

- ●Built-in Input Filter
- ●Input-Output Isolation
- ●High Efficiency 87～91%
- ●Wide Input Voltage Range
- ●High Reliability
- ●Adjustable Output Volt. ±10%
- ●Input Low Voltage Protection
- ●Input Over Voltage Protection
- ●Output Over Voltage Protection
- ●Thermal Protection +110℃～+120℃
- ●Possible Parallel Operation up to 3 converters
- ●Operating Ambient Temperature −40℃～+85℃
- ●Conformity to RoHS2 Directive
- ●Not built-in aluminum and tantalum electrolytic capacitor

- ●入力フィルタ内蔵
- ●入出力間絶縁
- ●高効率 87～91%
- ●広範囲な入力電圧
- ●高信頼性
- ●可変出力電圧 ±10%
- ●入力低電圧保護回路内蔵
- ●入力過電圧保護回路内蔵
- ●出力過電圧保護回路内蔵
- ●過熱保護回路内蔵 +110℃～+120℃
- ●3台まで並列運転可能
- ●動作周囲温度 −40℃～+85℃
- ●RoHS2指令対応
- ●アルミ電解コンデンサ及び タンタルコンデンサ不使用

■ General Characteristics

(at Ta：25℃, Full Load, Nominal Vin)

●Input Voltage, Range	DC12, 24, 48, 100, 140V (See Table 1)
●Output Voltage, Current	See Table 1
●Output Voltage Range	±10% Adjustable
●Efficiency	See Table 1
●Line Regulation	±0.3% max. (at Vin Range)
●Load Regulation	3% max. (0～100% Load) (See Fig. 6)
●Reflected Input Ripple, Noise	(5% Vin)Vp-p max.
●Output Ripple	80mVp-p max.
●Output Noise	(0.5% Vout+100mV) p-p max.
●Short Circuit Protection	Built-in, Auto-restart (See Fig. 5)
●Over Voltage Protection	115～140% Output Voltage
●Temperature Coefficient	0.02%/℃ max.
●Operating Ambient Temp.	−40℃～+85℃ (See Fig. 1)
●Max. Case Temperature	+105℃
●Storage Temperature	−55℃～+125℃
●Isolation Voltage	AC2000V one minute (Input−Output−Case)
●Isolation Impedance	100MΩ min. (at DC1000V) (Input−Output−Case)
●Weight	Main Body：350g max. Heat Sink A3-13910：135g max. A3-13911：175g max. A3-13915：425g max.
●Humidity	20～95% RH
●Shock	490m/s² (11msec 3directions)
●Vibration	10～55Hz 98m/s² (30minutes 3directions)
●Surface Structure	Aluminum Case
●MTBF	400,000H (Ta：25℃, 80% Load, Nominal Vin)
●Warranty	5 years

■ Selection Guide

Table 1

Model Number	Input Volt. (Range) (V. DC)	Output Voltage (V. DC)	Output Current (A)	Efficiency (Typical)(%) 20% Load	50% Load	80% Load
FMU(FMS) 12− 3.3S 32A	12 (8～18) at 50% Load (9～18) at 100% Load	3.3	32	85	88	87
FMU(FMS) 12− 5S 28A		5	28	86	90	88
FMU(FMS) 12− 6S 23.3A		6	23.3	86	90	88
FMU(FMS) 12− 12S 13.4A		12	13.4	87	90	89
FMU(FMS) 12−13.8S 11.6A		13.8	11.6	87	90	89
FMU(FMS) 12− 15S 10.7A		15	10.7	87	90	89
FMU(FMS) 12− 24S 6.7A		24	6.7	87	90	89
FMU(FMS) 12− 28S 5.8A		28	5.8	87	90	89
FMU(FMS) 12− 48S 3.4A		48	3.4	87	90	89
FMU(FMS) 24− 3.3S 40A	24 (16～36)	3.3	40	88	91	90
FMU(FMS) 24 5S 32A		5	32	90	92	91
FMU(FMS) 24− 6S 26.6A		6	26.6	90	92	91
FMU(FMS) 24− 12S 16.7A		12	16.7	90	92	91
FMU(FMS) 24−13.8S 14.5A		13.8	14.5	90	92	91
FMU(FMS) 24− 15S 13.4A		15	13.4	90	92	91
FMU(FMS) 24− 24S 8.4A		24	8.4	90	92	91
FMU(FMS) 24− 28S 7.2A		28	7.2	90	92	91
FMU(FMS) 24− 48S 4.2A		48	4.2	90	92	91
FMU(FMS) 48− 3.3S 40A	48 (36～76)	3.3	40	88	91	90
FMU(FMS) 48− 5S 32A		5	32	91	92	91
FMU(FMS) 48− 6S 26.6A		6	26.6	91	92	91
FMU(FMS) 48− 12S 16.7A		12	16.7	91	92	91
FMU(FMS) 48−13.8S 14.5A		13.8	14.5	91	92	91
FMU(FMS) 48− 15S 13.4A		15	13.4	91	92	91
FMU(FMS) 48− 24S 8.4A		24	8.4	91	92	91
FMU(FMS) 48− 28S 7.2A		28	7.2	91	92	91
FMU(FMS) 48− 48S 4.2A		48	4.2	91	92	91
FMU(FMS)100− 3.3S 40A	100 (64～144)	3.3	40	85	91	90
FMU(FMS)100− 5S 32A		5	32	87	92	91
FMU(FMS)100− 6S 26.6A		6	26.6	87	92	91
FMU(FMS)100− 12S 16.7A		12	16.7	87	92	91
FMU(FMS)100−13.8S 14.5A		13.8	14.5	87	92	91
FMU(FMS)100− 15S 13.4A		15	13.4	87	92	91
FMU(FMS)100− 24S 8.4A		24	8.4	87	92	91
FMU(FMS)100− 28S 7.2A		28	7.2	87	92	91
FMU(FMS)100− 48S 4.2A		48	4.2	87	92	91
FMU(FMS)140 − 3.3S 40A	140 (90～200)	3.3	40	85	91	90
FMU(FMS)140− 5S 32A		5	32	87	92	91
FMU(FMS)140− 6S 26.6A		6	26.6	87	92	91
FMU(FMS)140− 12S 16.7A		12	16.7	87	92	91
FMU(FMS)140−13.8S 14.5A		13.8	14.5	87	92	91
FMU(FMS)140− 15S 13.4A		15	13.4	87	92	91
FMU(FMS)140− 24S 8.4A		24	8.4	87	92	91
FMU(FMS)140− 28S 7.2A		28	7.2	87	92	91
FMU(FMS)140− 48S 4.2A		48	4.2	87	92	91

＊上記仕様以外にも対応可能ですのでお問い合わせください。
Please consult with us about other specification.

■ Terminal Outs & Dimensions (±0.5mm)

FMU type

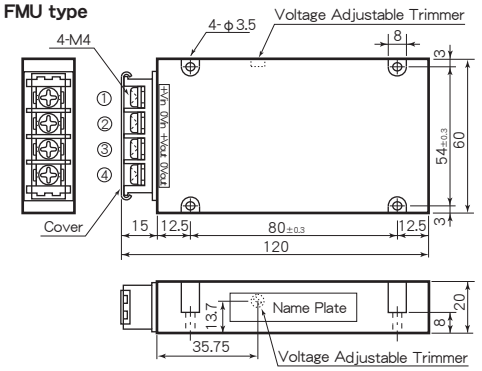

Terminal Outs

①	+Vdc in
②	0 Vdc in
③	+Vdc out
④	0 Vdc out

⊘ Voltage Adjustable Trimmer

FMS type

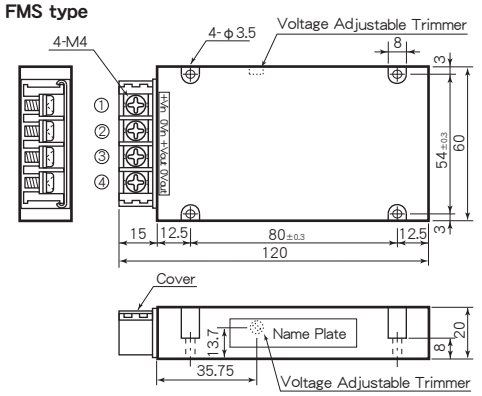

Terminal Outs

①	+Vdc in
②	0 Vdc in
③	+Vdc out
④	0 Vdc out

⊘ Voltage Adjustable Trimmer

■ Block Diagram

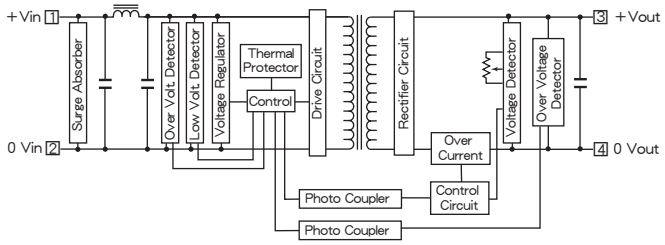

■ Characteristic Curves

Fig. 1 Derating Curve

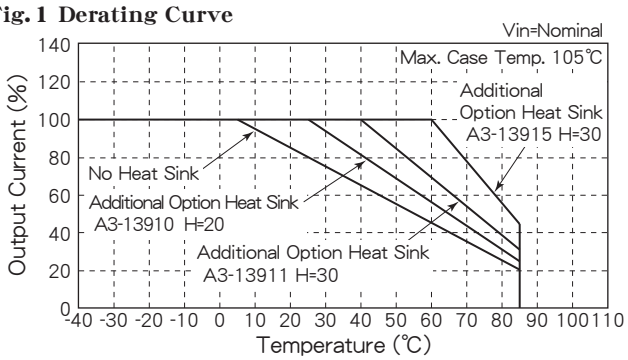

■ Option Heat Sink

Fig. 2 Temperature Characteristic on Case Surface

＊Option Heat Sink Model : A3-13910

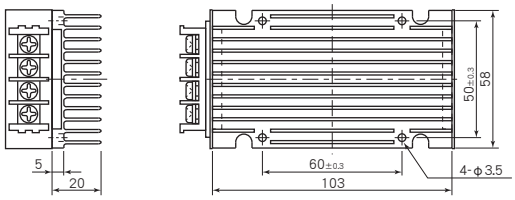

FMU24-12S16.7A Additonal Heat Sink A3-13910
Ta=25℃, 100% Load, Vin=Nominal

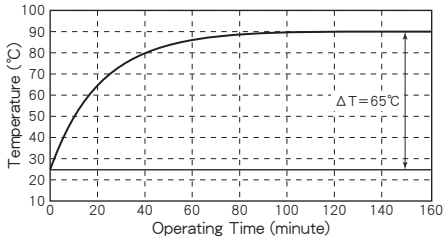

Fig. 3 Temperature Characteristic on Case Surface

＊Option Heat Sink Model : A3-13911

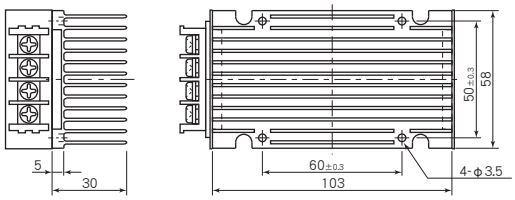

FMU24-12S16.7A Additonal Heat Sink A3-13911
Ta=25℃, 100% Load, Vin=Nominal

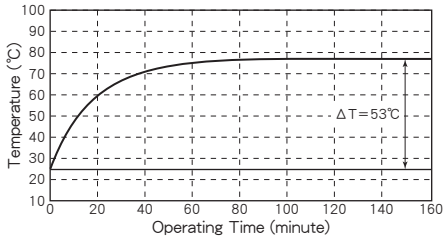

Fig. 4 Temperature Characteristic on Case Surface

＊Option Heat Sink Model : A3-13915

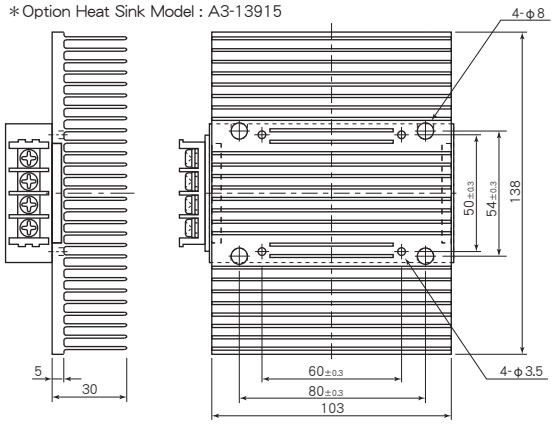

FMU24-12S16.7A Additonal Heat Sink A3-13915
Ta=25℃, 100% Load, Vin=Nominal

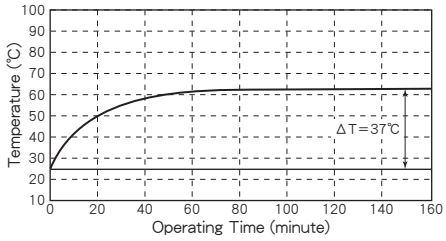

■ Characteristic Curves

Fig. 5 Short Circuit Operating Area

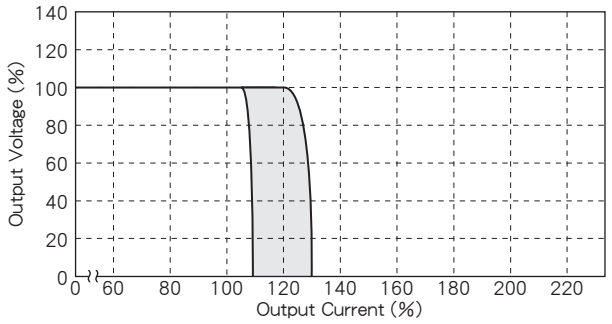

Fig. 6 Output Voltage vs. Output Current

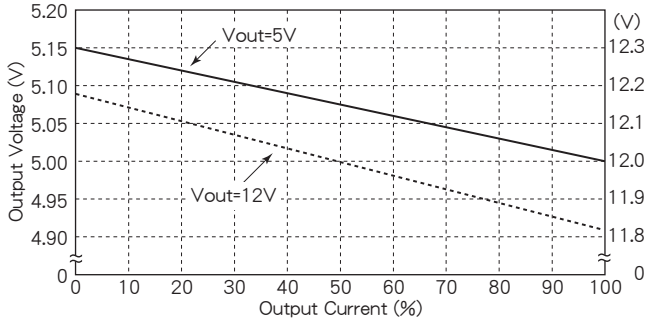

＊並列運転時に各モジュールの電流を平均化するため
負荷変動を大きくしてあります。
Load Regulation is regulated large on purpose to equate the each unit's output current at parallel operation.

Fig. 7 Efficiency vs. Output Current

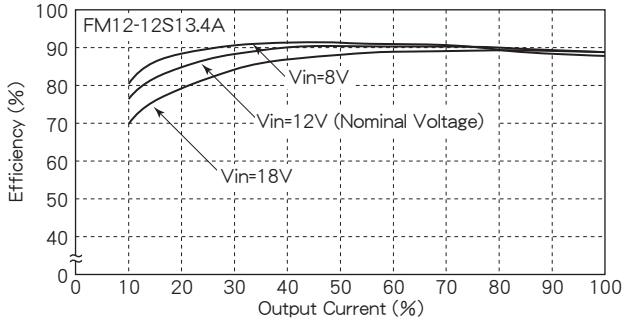

Fig. 8 Efficiency vs. Output Current

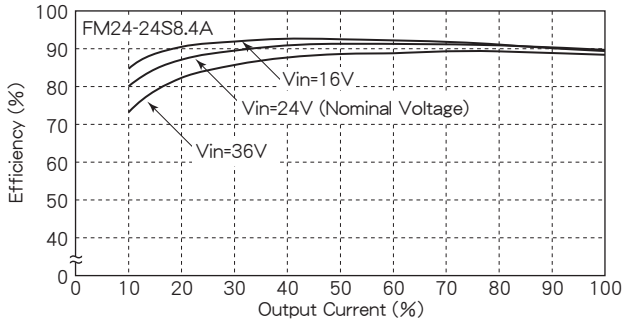

Fig. 9 Efficiency vs. Output Current

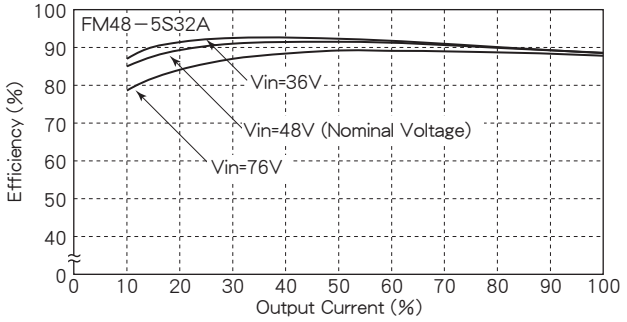

Fig. 10 Efficiency vs. Output Current

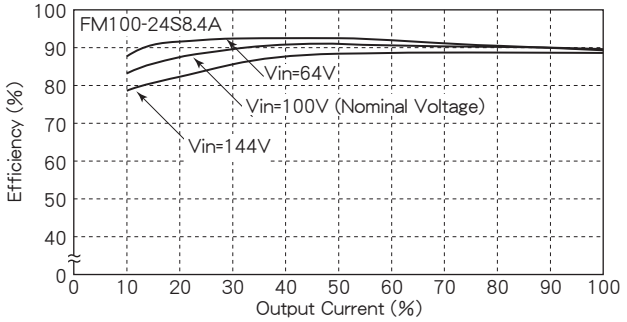

Fig. 11 Efficiency vs. Output Current

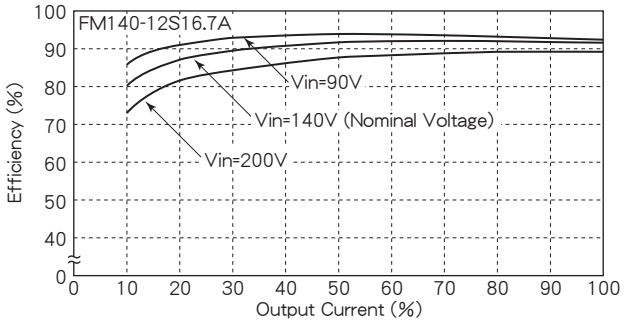

■ Parallel Operation

同機種を並列に動作させることにより、出力電流容量を増やすことができます。下図のように結線し、各コンバータ間の出力電圧を同じ電圧に調整することで、並列運転ができます。(Fig. 12を御参照ください)
It is possible to increase output current capacity by parallel operation of the same model. Please see the below figure for wiring instruction. Parallel operation is possible by each outputs to be same voltage.

Fig. 12 Parallel Operation Connection

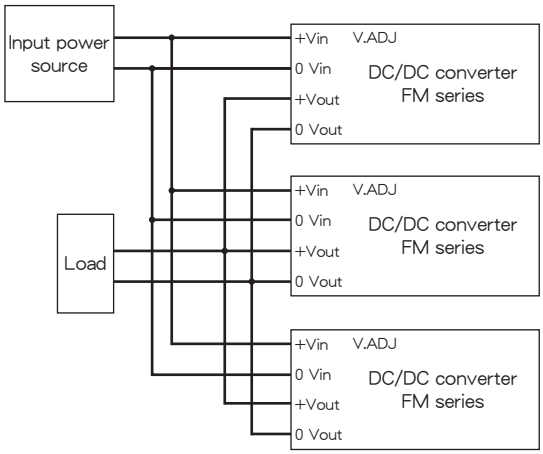

KM SERIES

105～200W DC/DC CONVERTERS
並列運転可能 Parallel Operation

KMU type

H20×W60×L135 (mm)

KMS type

H20×W60×L135 (mm)

■ Option Heat Sink

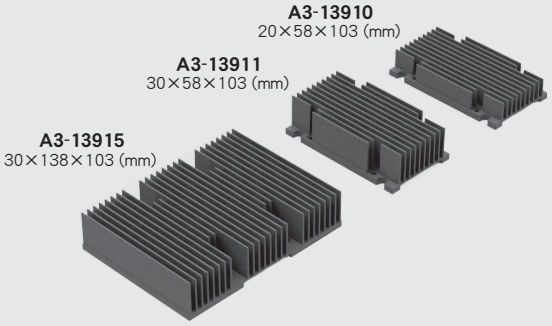

■ Features

- ●Built-in Input Filter
- ●Input-Output Isolation
- ●High Efficiency 87～91%
- ●Wide Input Voltage Range
- ●High Reliability
- ●Adjustable Output Volt. ±10%
- ●Input Low Voltage Protection
- ●Input Over Voltage Protection
- ●Output Over Voltage Protection
- ●Thermal Protection +110℃～+120℃
- ●Remote ON/OFF Control
- ●Possible Parallel Operation up to 3 converters
- ●Operating Ambient Temperature −40℃～+85℃
- ●Conformity to RoHS2 Directive
- ●Not built-in aluminum and tantalum electrolytic capacitor

- ●入力フィルタ内蔵
- ●入出力間絶縁
- ●高効率 87～91%
- ●広範囲な入力電圧
- ●高信頼性
- ●可変出力電圧 ±10%
- ●入力低電圧保護回路内蔵
- ●入力過電圧保護回路内蔵
- ●出力過電圧保護回路内蔵
- ●過熱保護回路内蔵 +110℃～+120℃
- ●リモートON/OFFコントロール
- ●3台まで並列運転可能
- ●動作周囲温度 −40℃～+85℃
- ●RoHS2指令対応
- ●アルミ電解コンデンサ及び タンタルコンデンサ不使用

■ General Characteristics

(at Ta：25℃, Full Load, Nominal Vin)

●Input Voltage, Range	DC12, 24, 48, 100, 140V (See Table 1)
●Output Voltage, Current	See Table 1
●Output Voltage Range	±10% Adjustable
●Efficiency	See Table 1
●Line Regulation	±0.3% max. (at Vin Range)
●Load Regulation	3% max. (0～100% Load) (See Fig. 6)
●Reflected Input Ripple, Noise	(5% Vin) Vp-p max.
●Output Ripple	80mVp-p max.
●Output Noise	(0.5% Vout+100mV) p-p max.
●Short Circuit Protection	Built-in, Auto-restart (See Fig. 5)
●Over Voltage Protection	115～140% Output Voltage
●Remote ON/OFF Control	ON：Short or 0～0.8V OFF：Open or 2～10V (Between terminal ② ～ ③)
●Temperature Coefficient	0.02%/℃ max.
●Operating Ambient Temp.	−40℃～+85℃ (See Fig. 1)
●Max. Case Temperature	+105℃
●Storage Temperature	−55℃～+125℃
●Isolation Voltage	AC2000V one minute (Input−Output−Case)
●Isolation Impedance	100MΩ min. (at DC1000V) (Input−Output−Case)
●Weight	Main Body：350g max. Heat Sink A3-13910：135g max. A3-13911：175g max. A3-13915：425g max.
●Humidity	20～95% RH
●Shock	490m/s² (11msec 3directions)
●Vibration	10～55Hz 98m/s² (30minutes 3directions)
●Surface Structure	Aluminum Case
●MTBF	400,000H (Ta：25℃, 80% Load, Nominal Vin)
●Warranty	5 years

■ Selection Guide

Table 1

Model Number	Input Volt. (Range) (V. DC)	Output Voltage (V. DC)	Output Current (A)	Efficiency (Typical)(%) 20% Load	50% Load	80% Load
KMU(KMS) 12− 3.3S 32A	12 (8～18) at 50% Load (9～18) at 100% Load	3.3	32	85	88	87
KMU(KMS) 12− 5S 28A		5	28	86	90	88
KMU(KMS) 12− 6S 23.3A		6	23.3	86	90	88
KMU(KMS) 12− 12S 13.4A		12	13.4	87	90	89
KMU(KMS) 12−13.8S 11.6A		13.8	11.6	87	90	89
KMU(KMS) 12− 15S 10.7A		15	10.7	87	90	89
KMU(KMS) 12− 24S 6.7A		24	6.7	87	90	89
KMU(KMS) 12− 28S 5.8A		28	5.8	87	90	89
KMU(KMS) 12− 48S 3.4A		48	3.4	87	90	89
KMU(KMS) 24− 3.3S 40A	24 (16～36)	3.3	40	88	91	90
KMU(KMS) 24− 5S 32A		5	32	90	92	91
KMU(KMS) 24− 6S 26.6A		6	26.6	90	92	91
KMU(KMS) 24− 12S 16.7A		12	16.7	90	92	91
KMU(KMS) 24−13.8S 14.5A		13.8	14.5	90	92	91
KMU(KMS) 24− 15S 13.4A		15	13.4	90	92	91
KMU(KMS) 24− 24S 8.4A		24	8.4	90	92	91
KMU(KMS) 24− 28S 7.2A		28	7.2	90	92	91
KMU(KMS) 24− 48S 4.2A		48	4.2	90	92	91
KMU(KMS) 48− 3.3S 40A	48 (36～76)	3.3	40	88	91	90
KMU(KMS) 48− 5S 32A		5	32	91	92	91
KMU(KMS) 48− 6S 26.6A		6	26.6	91	92	91
KMU(KMS) 48− 12S 16.7A		12	16.7	91	92	91
KMU(KMS) 48−13.8S 14.5A		13.8	14.5	91	92	91
KMU(KMS) 48− 15S 13.4A		15	13.4	91	92	91
KMU(KMS) 48− 24S 8.4A		24	8.4	91	92	91
KMU(KMS) 48− 28S 7.2A		28	7.2	91	92	91
KMU(KMS) 48− 48S 4.2A		48	4.2	91	92	91
KMU(KMS)100− 3.3S 40A	100 (64～144)	3.3	40	85	91	90
KMU(KMS)100− 5S 32A		5	32	87	92	91
KMU(KMS)100− 6S 26.6A		6	26.6	87	92	91
KMU(KMS)100− 12S 16.7A		12	16.7	87	92	91
KMU(KMS)100−13.8S 14.5A		13.8	14.5	87	92	91
KMU(KMS)100− 15S 13.4A		15	13.4	87	92	91
KMU(KMS)100− 24S 8.4A		24	8.4	87	92	91
KMU(KMS)100− 28S 7.2A		28	7.2	87	92	91
KMU(KMS)100− 48S 4.2A		48	4.2	87	92	91
KMU(KMS)140 − 3.3S 40A	140 (90～200)	3.3	40	85	91	90
KMU(KMS)140− 5S 32A		5	32	87	92	91
KMU(KMS)140− 6S 26.6A		6	26.6	87	92	91
KMU(KMS)140− 12S 16.7A		12	16.7	87	92	91
KMU(KMS)140−13.8S 14.5A		13.8	14.5	87	92	91
KMU(KMS)140− 15S 13.4A		15	13.4	87	92	91
KMU(KMS)140− 24S 8.4A		24	8.4	87	92	91
KMU(KMS)140− 28S 7.2A		28	7.2	87	92	91
KMU(KMS)140− 48S 4.2A		48	4.2	87	92	91

＊上記仕様以外にも対応可能ですのでお問い合わせください。
Please consult with us about other specification.

KM SERIES DATA SHEET

■ Terminal Outs & Dimensions (±0.5mm)

KMU type

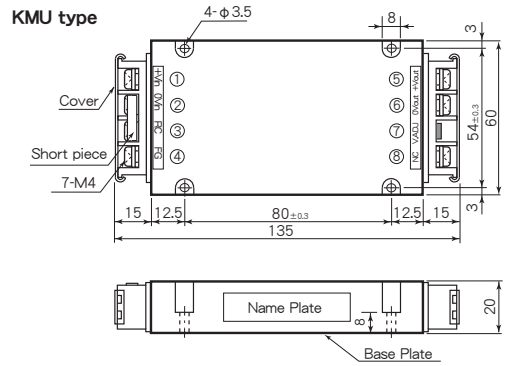

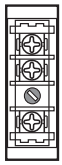

Terminal Outs

①	+Vdc in
②	0 Vdc in
③	RC
④	FG
⑤	+Vdc out
⑥	0 Vdc out
⑦	V. ADJ
⑧	NC

Voltage Adjustable Trimmer

KMS type

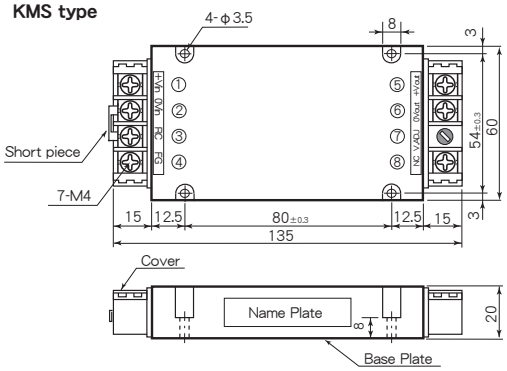

Terminal Outs

①	+Vdc in
②	0 Vdc in
③	RC
④	FG
⑤	+Vdc out
⑥	0 Vdc out
⑦	V. ADJ
⑧	NC

Voltage Adjustable Trimmer

■ Block Diagram

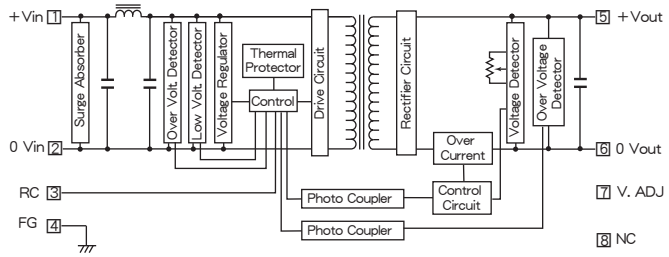

■ Characteristic Curves

Fig. 1 Derating Curve

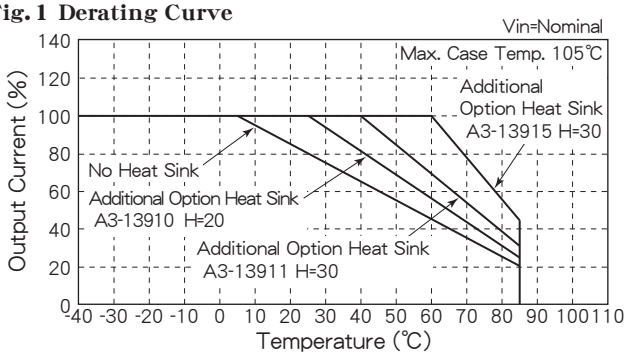

■ Option Heat Sink

Fig. 2 Temperature Characteristic on Case Surface

＊Option Heat Sink Model : A3-13910

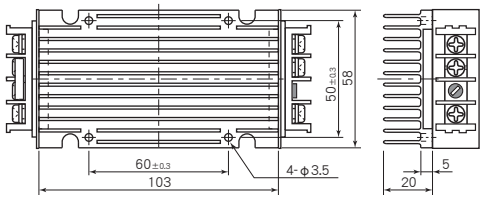

KMU24-12S16.7A Additonal Heat Sink A3-13910
Ta=25℃, 100% Load, Vin=Nominal

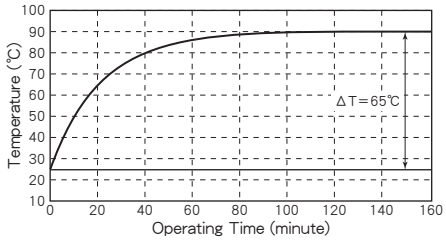

Fig. 3 Temperature Characteristic on Case Surface

＊Option Heat Sink Model : A3-13911

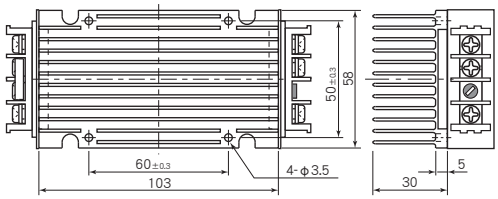

KMU24-12S16.7A Additonal Heat Sink A3-13911
Ta=25℃, 100% Load, Vin=Nominal

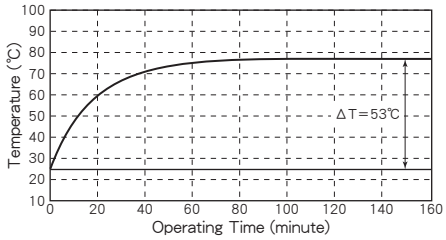

Fig. 4 Temperature Characteristic on Case Surface

＊Option Heat Sink Model : A3-13915

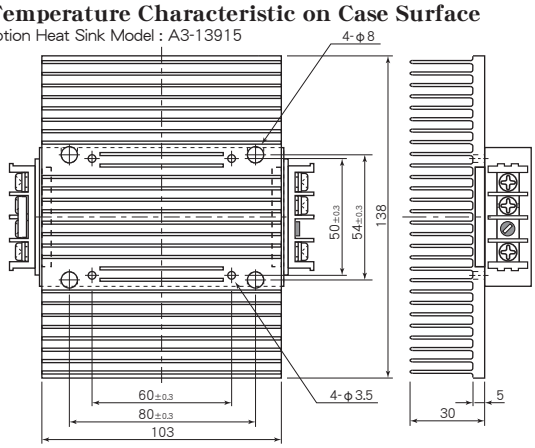

KMU24-12S16.7A Additonal Heat Sink A3-13915
Ta=25℃, 100% Load, Vin=Nominal

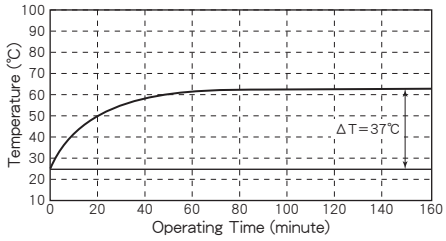

■ Characteristic Curves

Fig. 5 Short Circuit Operating Area

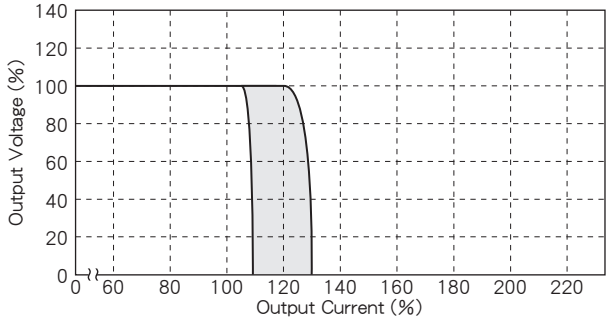

Fig. 6 Output Voltage vs. Output Current

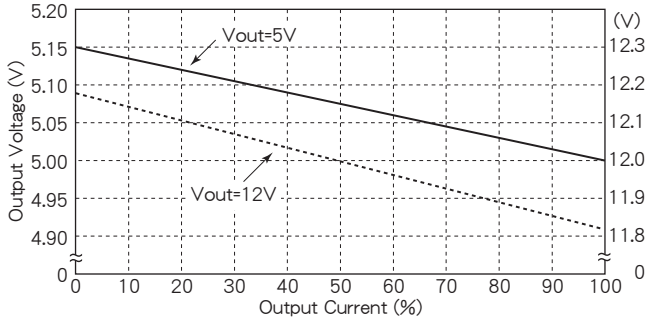

＊並列運転時に各モジュールの電流を平均化するため
負荷変動を大きくしてあります。
Load Regulation is regulated large on purpose to equate the each unit's output current at parallel operation.

Fig. 7 Efficiency vs. Output Current

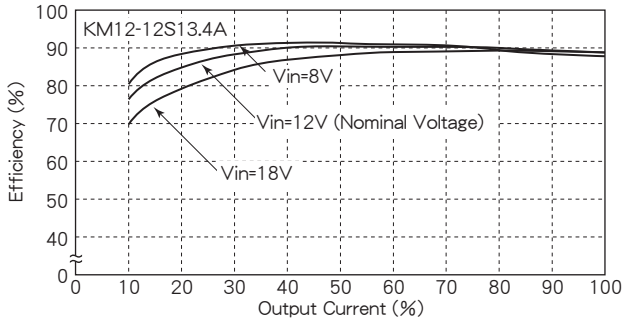

Fig. 8 Efficiency vs. Output Current

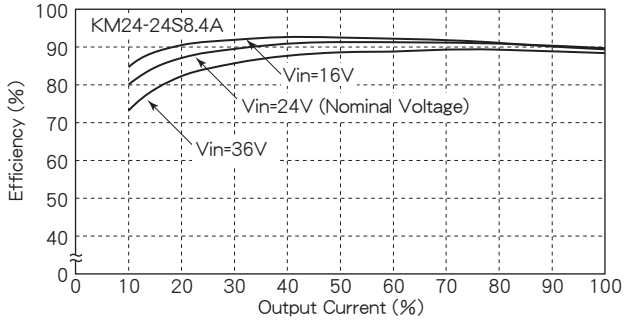

Fig. 9 Efficiency vs. Output Current

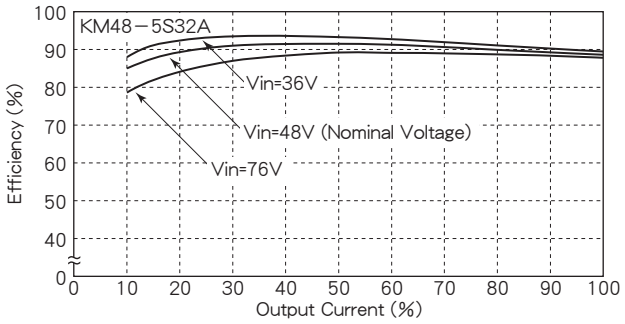

Fig. 10 Efficiency vs. Output Current

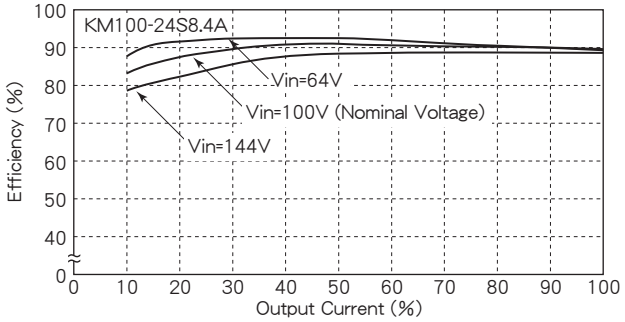

Fig. 11 Efficiency vs. Output Current

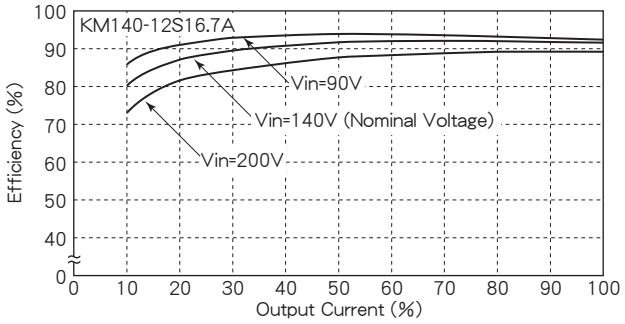

■ Parallel Operation

同機種を並列に動作させせることにより、出力電流容量を増やすことができます。下図のように結線し、各コンバータ間の出力電圧を同じ電圧に調整することで、並列運転ができます。(Fig. 12を御参照ください)
It is possible to increase output current capacity by parallel operation of the same model. Please see the below figure for wiring instruction. Parallel operation is possible by each outputs to be same voltage.

Fig. 12 Parallel Operation Connection

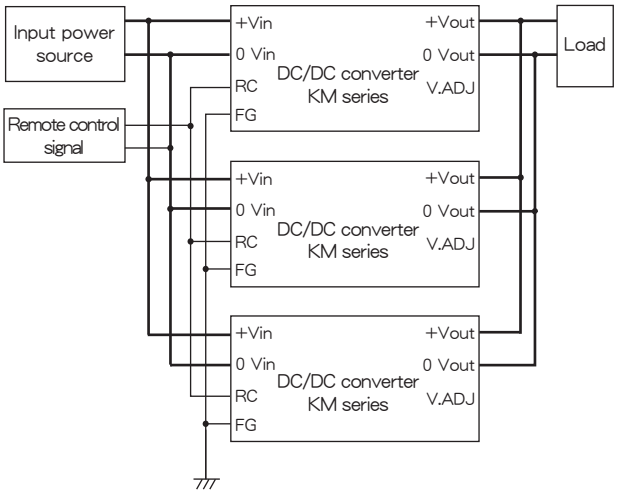

PM シリーズ

240～300W　DC/DCコンバータ
並列運転可能

PMS(端子横向きタイプ)

H20×W60×L120 (mm)

オプションヒートシンクA
A3-14777

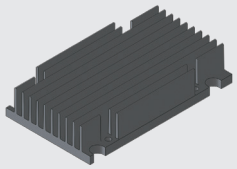

H20×W58×L98(mm)

オプションヒートシンクB
A3-14778

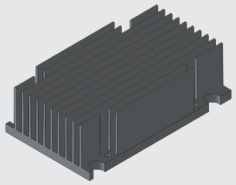

H30×W58×L98(mm)

■特　長

- ●入力フィルタ内蔵
- ●入出力間絶縁(AC2000V)
- ●高効率　91～93%
- ●広範囲な入力電圧
- ●高信頼性
- ●可変出力電圧　±10%
- ●入力低電圧保護回路内蔵
- ●入力過電圧保護回路内蔵
- ●出力過電圧保護回路内蔵
- ●過熱保護回路内蔵
  ＋110℃～＋120℃
- ●3台まで並列運転可能
- ●動作周囲温度
  －40℃～＋85℃
- ●RoHS2指令対応
- ●アルミ電解コンデンサ及び
  タンタルコンデンサ不使用

■仕　様

(周囲温度：25℃, 入力電圧：定格, 負荷：100%)

●入力電圧(範囲)	DC12, 24, 48, 100, 140V (表１参照)
●出力電圧, 電流	表１参照
●出力電圧調整範囲	±10%
●効率	表１参照
●対入力変動率	±0.3% max. (入力電圧範囲において)
●対負荷変動率	3% max. (0～100%負荷において) (図４参照)
●入力リップル・ノイズ	表２参照
●出力リップル・ノイズ	表３参照
●出力過電流保護	有り(図３参照), 自動復帰
●出力過電圧保護	出力電圧115～140%時, 手動復帰
●出力電圧温度係数	0.02%/℃ max.
●動作周囲温度範囲	－40℃～＋85℃ (図１参照)
●最大ケース温度	+105℃
●保存周囲温度範囲	－55℃～＋125℃
●絶縁耐圧	AC2000V　1分間 (入力－出力－ケース)
●絶縁抵抗	100MΩ min. (DC1000Vにて) (入力－出力－ケース)
●質量	本体：400g max. オプションヒートシンク A3-14777：135g max. A3-14778：175g max.
●湿度	20～95% RH
●衝撃	490m/s² (11ms X, Y, Z方向)
●振動	10～55Hz 98m/s² (30分間 X, Y, Z方向)
●構造	アルミケース
●MTBF	220,000H (周囲温度：25℃, 入力電圧：定格, 負荷：80%)
●無償保証期間	5年間

■型　式

表１

型式	入力電圧(電圧範囲)(V.DC)	出力電圧(V.DC)	出力電流(A)	効率(typ.)(%) 20%負荷	50%負荷	80%負荷
PMS　12－　12S　20A	12 (8～18) 50%負荷時 (9～18) 100%負荷時	12	20	87	91	91
PMS　12－13.8S 17.4A		13.8	17.4	88	91	91
PMS　12－　15S　16A		15	16	88	91	91
PMS　12－　24S　10A		24	10	88	91	91
PMS　12－　28S　8.6A		28	8.6	88	91	91
PMS　12－　48S　5A		48	5	88	91	91
PMS　24－　12S　25A	24 (16～36)	12	25	89	93	93
PMS　24－13.8S 21.7A		13.8	21.7	89	93	93
PMS　24－　15S　20A		15	20	89	93	93
PMS　24－　24S 12.5A		24	12.5	89	93	93
PMS　24－　28S 10.7A		28	10.7	89	93	93
PMS　24－　48S 6.25A		48	6.25	89	93	93
PMS　48－　12S　25A	48 (36～76)	12	25	89	93	93
PMS　48－13.8S 21.7A		13.8	21.7	89	93	93
PMS　48－　15S　20A		15	20	89	93	93
PMS　48－　24S 12.5A		24	12.5	89	93	93
PMS　48－　28S 10.7A		28	10.7	89	93	93
PMS　48－　48S 6.25A		48	6.25	89	93	93
PMS 100－　12S　25A	100 (64～144)	12	25	89	93	93
PMS 100－13.8S 21.7A		13.8	21.7	89	93	93
PMS 100－　15S　20A		15	20	89	93	93
PMS 100－　24S 12.5A		24	12.5	89	93	93
PMS 100－　28S 10.7A		28	10.7	89	93	93
PMS 100－　48S 6.25A		48	6.25	89	93	93
PMS 140－　12S　25A	140 (90～200)	12	25	89	93	93
PMS 140－13.8S 21.7A		13.8	21.7	89	93	93
PMS 140－　15S　20A		15	20	89	93	93
PMS 140－　24S 12.5A		24	12.5	89	93	93
PMS 140－　28S 10.7A		28	10.7	89	93	93
PMS 140－　48S 6.25A		48	6.25	89	93	93

＊上記仕様以外にも対応可能ですのでお問い合わせください。

表２ 入力電圧リップル・ノイズ

入力電圧(電圧範囲)(V.DC)	リップル(mVp-p max.)	ノイズ(mVp-p max.)
12 (9～18)	300	250
24 (16～36)	400	350
48 (36～76)	500	400
100 (64～144)	600	500
140 (90～200)	800	550

＊入力ラインは各1.5mツイスト線にて測定
＊使用環境によって異なります

表３ 出力電圧リップル・ノイズ

出力電圧(V.DC)	リップル(mVp-p max.)	ノイズ(mVp-p max.)
12	40	160
13.8	40	170
15	40	175
24	60	220
28	60	240
48	80	340

PM シリーズ　データシート

■ブロック図

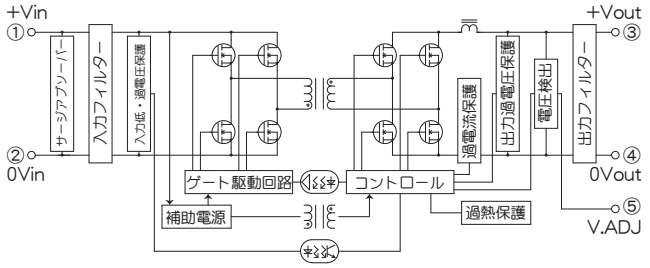

■端子配列及び外形寸法 (±0.5mm)

PMS(端子横向きタイプ)

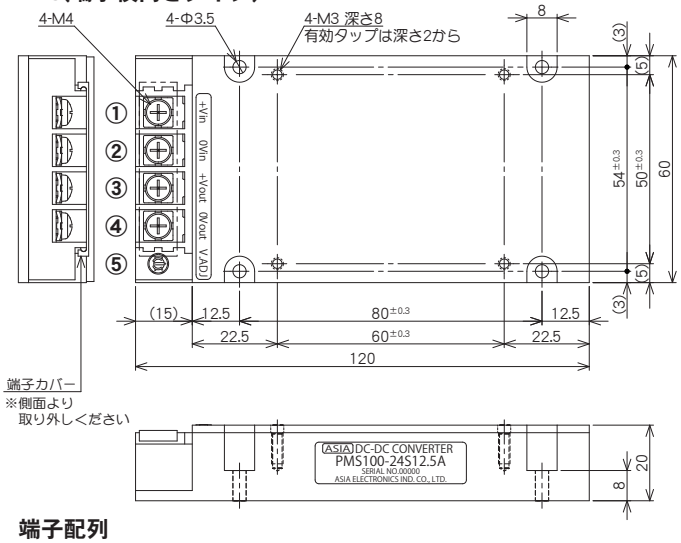

端子配列

①	直流入力端子+Vin
②	直流入力端子 0 Vin
③	直流出力端子+Vout
④	直流出力端子 0 Vout
⑤	出力電圧調整ボリュームV.ADJ

■オプションヒートシンク (±0.5mm)

ヒートシンクA(H=20mm)
型式：A3-14777

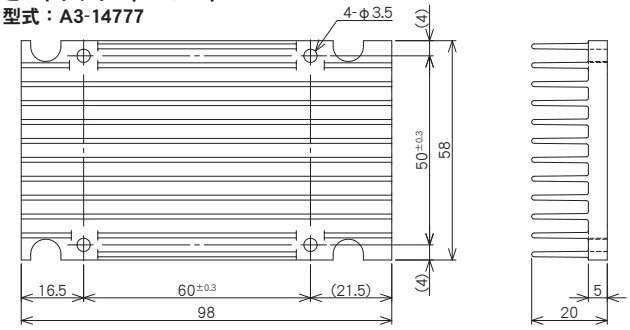

ヒートシンクB(H=30mm)
型式：A3-14778

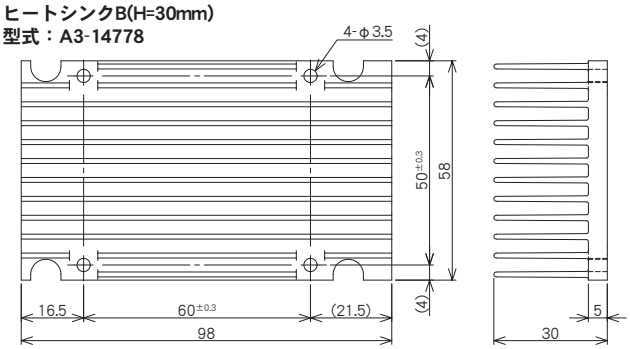

■特性データ

図1 ディレーティングカーブ

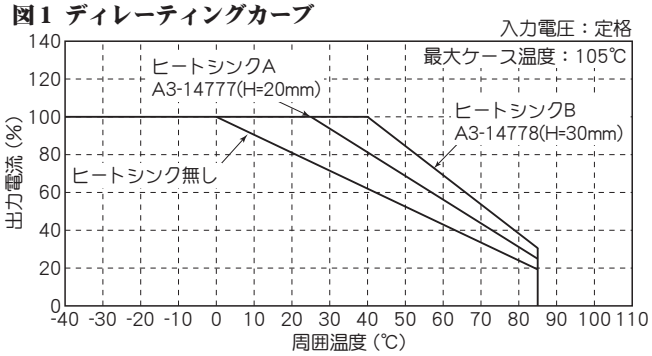

図2 温度上昇特性(ケース表面温度)【PMS100-24S12.5A】

図2.1 オプションヒートシンクを付けない場合

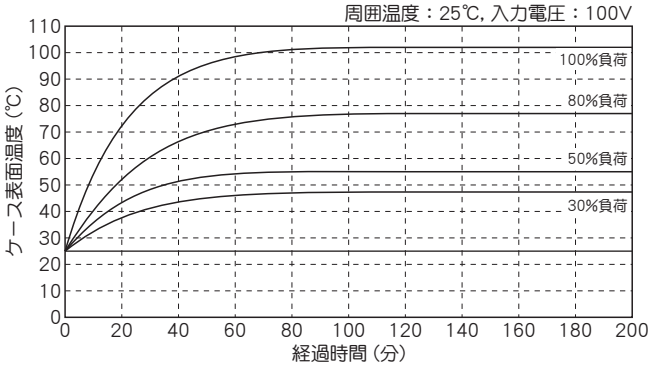

図2.2 オプションヒートシンクA(H=20mm) A3-14777 を付けた場合

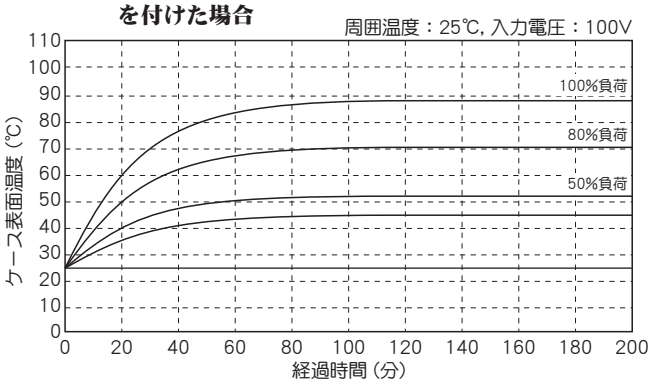

図2.3 オプションヒートシンクB(H=30mm) A3-14778 を付けた場合

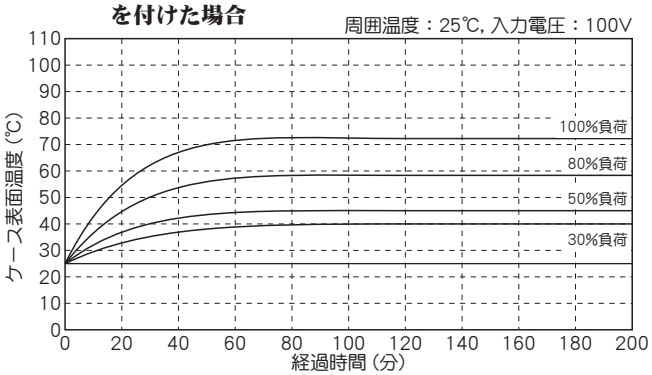

■特性データ

図3 出力過電流保護範囲

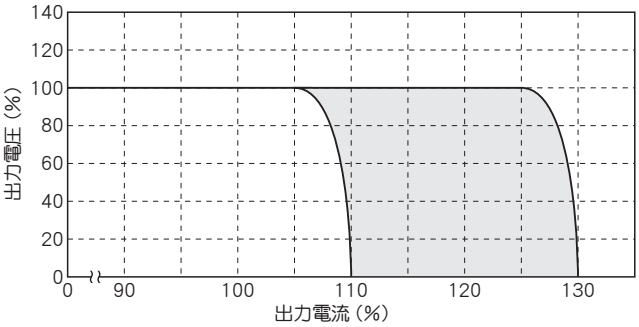

図4 出力電圧－出力電流特性【出力電圧：24V】

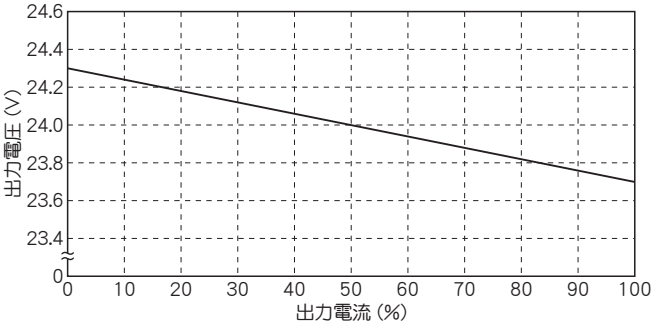

＊並列運転時に各モジュールの電流を平均化するため
負荷変動を大きくしてあります。

図5 効率－出力電流特性【PMS100-24S12.5A】

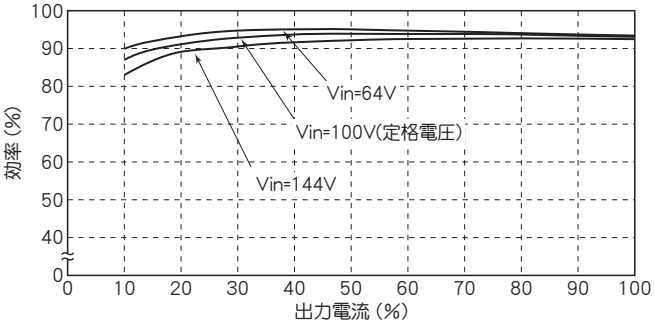

図6 入力電圧　リップル・ノイズ【PMS100-24S12.5A】

図6.1 入力電圧： 64V, 負荷：100%

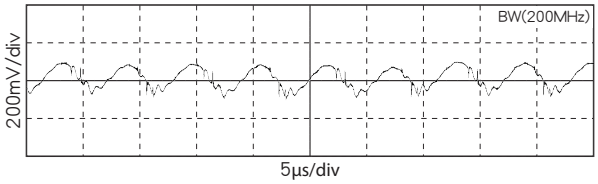

図6.2 入力電圧：100V, 負荷：100%

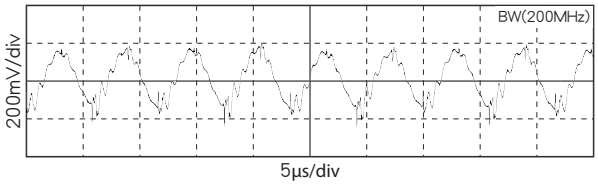

図6.3 入力電圧：144V, 負荷：100%

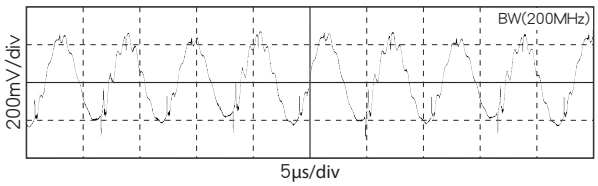

図7 出力電圧　リップル・ノイズ【PMS100-24S12.5A】

図7.1 入力電圧： 64V, 負荷：100%

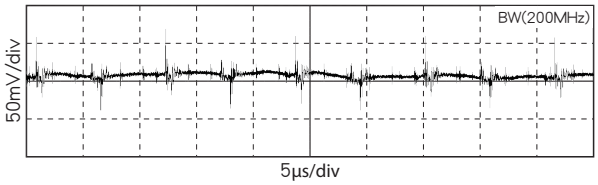

図7.2 入力電圧：100V, 負荷：100%

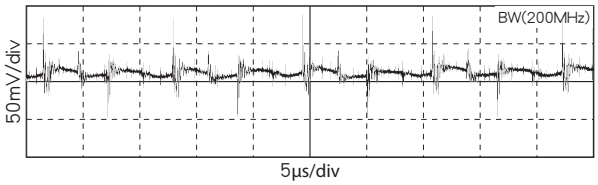

図7.3 入力電圧：144V, 負荷：100%

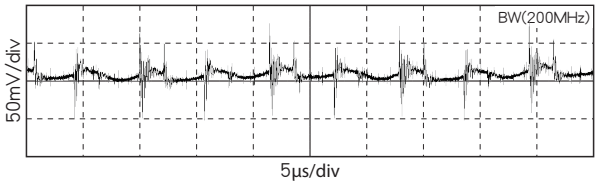

■ 並列運転

同機種を並列に動作させることにより、出力電流容量を増やすことができます。下図のように結線し、各コンバータ間の出力電圧を同じ電圧に調整することで、並列運転ができます。図８を参照ください。

図８ 並列運転時結線方法

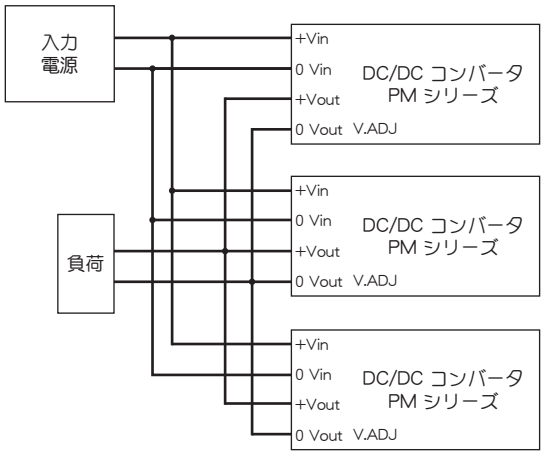

RDP SERIES

130～250W DC/DC CONVERTERS
Single Output

並列運転可能
Parallel Operation

H36×W100×L220 (mm)

■ Features

- ●Wide Input Voltage Range ●広範囲な入力電圧範囲
- ●High Efficiency 85%～92% ●高効率 85%～92%
- ●Input-Output Isolation (AC2000V) ●入出力間絶縁 (AC2000V)
- ●Low Output Ripple and Noise ●出力ﾘｯﾌﾟﾙ,ﾉｲｽﾞが小さい
- ●Possible Parallel Operation up to 4 converters ●4台まで並列運転可能
- ●Remote ON/OFF Control ●ﾘﾓｰﾄON/OFFｺﾝﾄﾛｰﾙ機能
- ●Input Rush Current Protection ●入力突入電流保護回路内蔵
- ●Input Low Voltage Protection ●入力低電圧保護回路内蔵
- ●Input Over Voltage Protection ●入力過電圧保護回路内蔵
- ●Output Over Voltage Protection 120%～140% Operation ●出力過電圧保護回路内蔵 120%～140%動作
- ●Operating Ambient Temp −25℃～+71℃ ●動作周囲温度 −25℃～+71℃
- ●Max. Case Temperature +85℃ ●最大ケース温度+85℃
- ●Conformity to RoHS2 Directive ●RoHS2指令対応

■ General Characteristics

(at Ta : 25℃, Full Load, Nominal Vin)

●Input Voltage, Range	DC 12, 24, 48, 96V (See Table 1)
●Output Voltage, Current	See Table 1
●Output Voltage Adjustment	-3～+10%
●Efficiency	See Table 1
●Line Regulation	0.2% max. (at Vin Range)
●Load Regulation	±1.5% typ. (0～100% Load) (See Fig. 8)
●Output Ripple	(0.1% Vout+50mV) p-p max.
●Output Noise	(0.5% Vout+50mV) p-p max.
●Short Circuit Protection	Built-in, Auto-restart (See Fig. 2)
●Output Over Voltage Protection	Built-in, Shut-down (120%～140% Vout)
●Remote ON/OFF Control	ON : Short or 0～0.8V OFF : Open or 2～10V (Between terminal ③ ～ ④)
●Temperature Coefficient	0.02%/℃ max.
●Operating Ambient Temp.	−25℃～+71℃ (See Fig. 1)
●Max. Case Temp.	+85℃
●Storage Temp.	−40℃～+85℃
●Isolation Voltage	AC2000V one minute (Input−Output−Case)
●Isolation Impedance	100MΩ min. (at DC1000V) (Input−Output−Case)
●Weight	Main Body : 1.8kg max. Heat Sink : 400g max.
●Humidity	20～95% RH
●Shock	490m/s² (11msec 3directions)
●Vibration	JIS E4031 Category 1 - Class B
●Surface Structure	Aluminum Case
●MTBF	100,000H (Ta : 25℃, 80% Load, Nominal Vin)
●Warranty	5 years

■ Terminal Outs & Dimensions (±0.5mm)

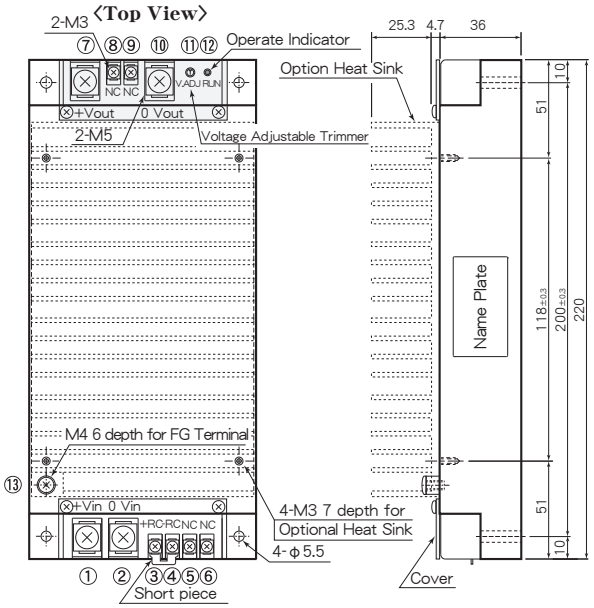

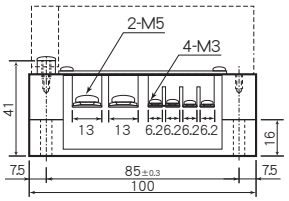

＊Option Heat Sink Model : A3-9023

Terminal Outs and Function

①	+Vdc in	⑦	+Vdc out
②	0 Vdc in	⑧	NC
③	+RC	⑨	NC
④	−RC	⑩	0 Vdc out
⑤	NC	⑪	V.ADJ
⑥	NC	⑫	Operate Indicator
		⑬	FG

■ Selection Guide

Table 1

Model Number	Input Voltage (Range) (V. DC)	Input Rush Current (max.)(A)	Output Voltage (V. DC)	Output Current (A)	Efficiency (typ.) (%) 20% Load	Efficiency (typ.) (%) 80% Load
RDP12 - 3.3S 40A	12 (9～18)	62	3.3	40	85	85
RDP12 - 5S 40A			5	40	86	87
RDP12 - 12S 20.8A			12	20.8	88	89
RDP12 -13.8S 18.1A			13.8	18.1	88	89
RDP12 - 15S 16.7A			15	16.7	88	89
RDP12 - 24S 10.5A			24	10.5	89	89
RDP12 - 48S 5.3A			48	5.3	89	90
RDP12 - 100S 2.5A			100	2.5	89	90
RDP12 - 140S 1.8A			140	1.8	89	89
RDP12 - 200S 1.3A			200	1.3	89	90
RDP12 - 300S 0.85A			300	0.85	89	90
RDP24 - 3.3S 40A	24 (18～36)	31	3.3	40	86	87
RDP24 - 5S 40A			5	40	87	88
RDP24 - 12S 20.8A			12	20.8	88	91
RDP24 -13.8S 18.1A			13.8	18.1	88	91
RDP24 - 15S 16.7A			15	16.7	88	90
RDP24 - 24S 10.5A			24	10.5	88	91
RDP24 - 48S 5.3A			48	5.3	89	91
RDP24 - 100S 2.5A			100	2.5	89	92
RDP24 - 140S 1.8A			140	1.8	90	91
RDP24 - 200S 1.3A			200	1.3	90	91
RDP24 - 300S 0.85A			300	0.85	91	92
RDP48 - 3.3S 40A	48 (36～72)	16	3.3	40	86	87
RDP48 - 5S 40A			5	40	88	90
RDP48 - 12S 20.8A			12	20.8	88	91
RDP48 -13.8S 18.1A			13.8	18.1	88	91
RDP48 - 15S 16.7A			15	16.7	88	91
RDP48 - 24S 10.5A			24	10.5	88	91
RDP48 - 48S 5.3A			48	5.3	89	91
RDP48 - 100S 2.5A			100	2.5	89	91
RDP48 - 140S 1.8A			140	1.8	89	91
RDP48 - 200S 1.3A			200	1.3	89	91
RDP48 - 300S 0.85A			300	0.85	89	91
RDP96 - 3.3S 40A	96 (70～144)	8	3.3	40	86	87
RDP96 - 5S 40A			5	40	88	90
RDP96 - 12S 20.8A			12	20.8	88	91
RDP96 -13.8S 18.1A			13.8	18.1	88	91
RDP96 - 15S 16.7A			15	16.7	88	91
RDP96 - 24S 10.5A			24	10.5	88	92
RDP96 - 48S 5.3A			48	5.3	88	92
RDP96 - 100S 2.5A			100	2.5	88	92
RDP96 - 140S 1.8A			140	1.8	89	91
RDP96 - 200S 1.3A			200	1.3	89	91
RDP96 - 300S 0.85A			300	0.85	89	91

※ 上記仕様以外にも対応可能ですので お問い合わせ下さい。
Please consult with us about other specification.

■ Block Diagram

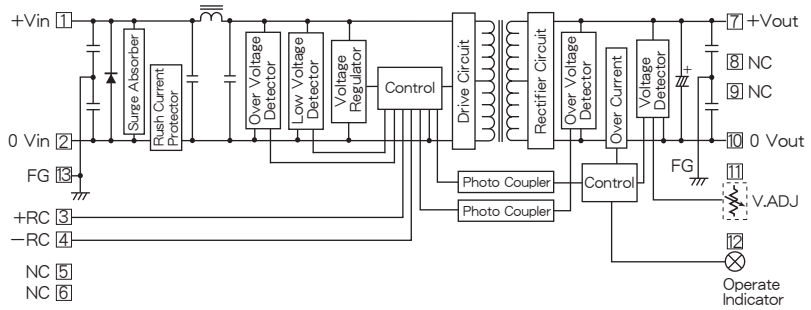

■ Characteristic Curves

Fig. 1 Derating Curve

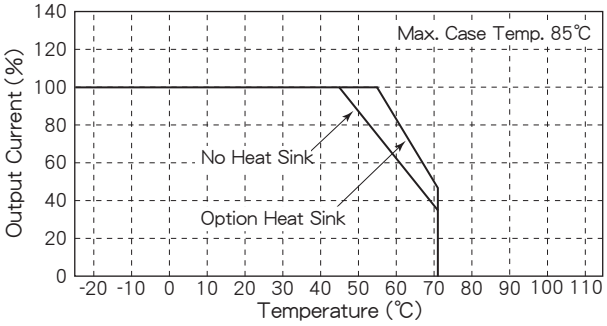

Fig. 2 Short Circuit Operating Area

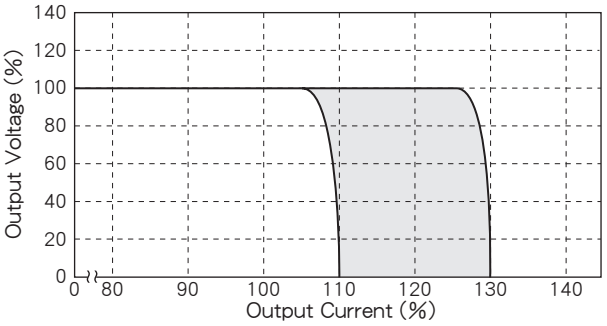

Fig. 3 Temperature Characteristic on Case Surface

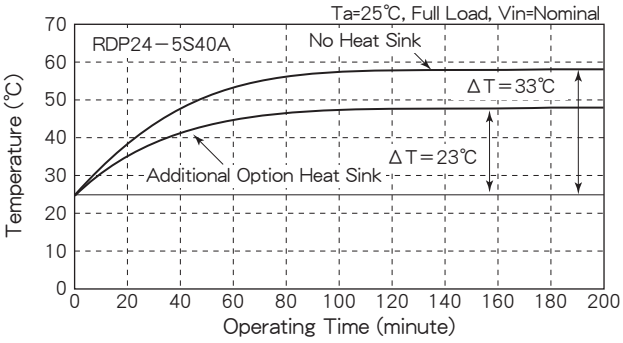

Fig. 4 Efficiency vs. Output Current

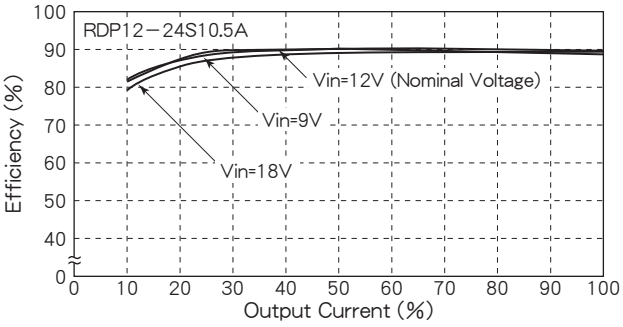

Fig. 5 Efficiency vs. Output Current

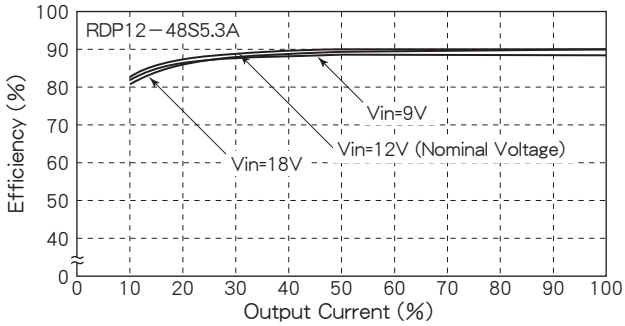

Fig. 6 Efficiency vs. Output Current

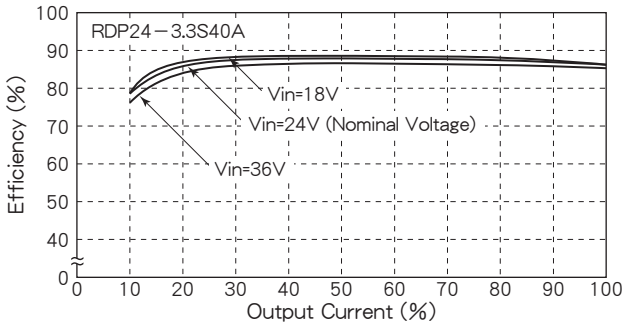

Fig. 7 Efficiency vs. Output Current

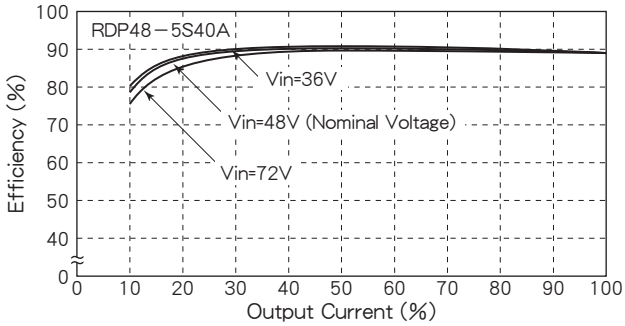

Fig. 8 Output Voltage vs. Output Current

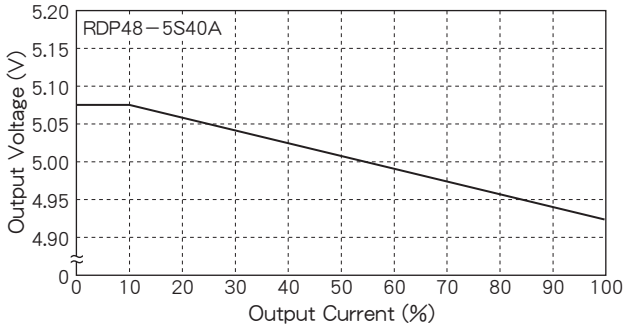

＊並列運転時に各モジュールの電流を平均化するため
負荷変動を大きくしてあります。
Load Regulation is regulated large on purpose to equate the each unit's output current at parallel operation.

■ 主な機能及び注意事項 Function and direction in application

1. 入力低電圧保護、入力過電圧保護 Input low/over voltage protection
下記入力電圧にて出力電圧がOFFとなります。入力電圧を規定値内に戻すと自動復帰します。
Output will be shut down in the input voltages on the following table. Output will automatically be reset when the input voltage comes to within the specified value.

定格入力電圧 Rated input voltage	低電圧保護 Low voltage protection	過電圧保護 Over voltage protection
12V (9～18V)	6～8V	20～22V
24V (18～36V)	12～16V	40～44V
48V (36～72V)	24～32V	75～82V
96V (70～144V)	48～64V	150～165V

2. 出力電圧値 Output voltage
出力電圧値はボリューム(V.ADJ)を回転させることにより、定格出力電圧の約－3%～+10%可変することができます。
Output voltage will be adjusted to -3% - +10% of rated voltage by means of volume (V.ADJ).

3. 出力過電流保護 Output over current protection
負荷が短絡した場合など、過大な負荷電流が流れたときに負荷と本体を保護する機能です。定格出力電流の約105%～130%にて検出し作動します(Fig. 2 参照)。出力は定電流電圧垂下特性、入力電流はフの字特性となっています。また自動復帰特性を有しています。
This function is to protect a power supply and a load when excessive current flows in case of short-circuited load or such possible conditions. It will operate in 105 - 130% of rated output current (see Fig. 2). Output has constant current voltage limiting characteristic and input current has combined current limiting with fold-back protection. It also has automatic reset function.

4. 出力過電圧保護 Output over voltage protection
出力の過電圧から負荷側を保護する機能です。出力電圧値が定格値の約120～140%になると出力をOFFします。
This function is to protect a load from output over voltage. Output will be shut down when output voltage is 120 - 140% of rated voltage.

5. リモートON/OFFコントロール Remote ON/OFF control
リモートON/OFFコントロールを使用して、電源の出力をON/OFFする事ができます。RC端子間をショートする事で出力電圧がON、RC端子間をオープンにする事で出力電圧がOFFになります。RC端子間にTTLレベルの電気信号を加える事により出力をON/OFFする事ができます。RC端子は入力側にあり、入力電源回路とは絶縁されていません。ON/OFFコントロールを使用しないときは、＋RC端子と－RC端子を付属のショートピンで短絡させて下さい。
Using remote ON/OFF control, ON/OFF of the power supply output is possible. The output voltage operates by a short between RC terminals, and the output voltage stops by open between RC terminals. ON/OFF of the output voltage is possible by adding the electrical signal of the TTL level between RC terminals. RC terminals are located on the input side and the circuit is not isolated from input power source circuit. In case you don't use ON/OFF control, please short-circuit ＋RC and －RC terminals by means of attached short-bar.

＊回路構成例 Example of ON/OFF control circuit

●TRによる例 Example by transistor

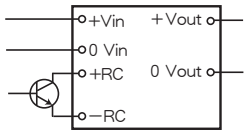

●SWによる例 Example by switch

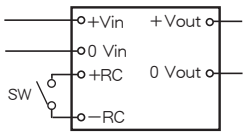

6. 並列運転 Parallel operation
同機種を並列に動作させることにより出力電流容量を増やすことができます。
並列運転は 4 台まで接続可能です。
It is possible to increase output current capacity by means of parallel operation of the same medel. Please see the figure below for wiring instructions.
Parallel operation is possible up to 4 converters.

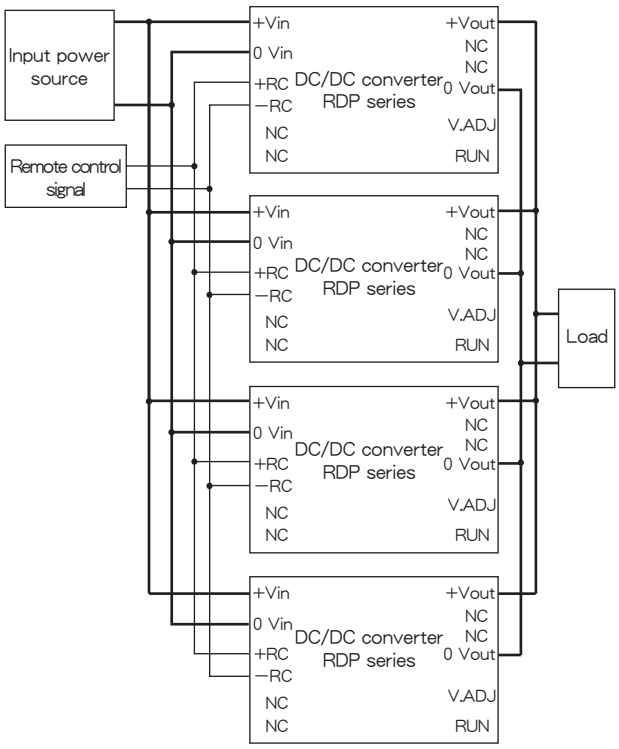

7. 入力側ヒューズ Input side fuse
電源の破損に備えて、必ず入力側にヒューズ又はブレーカーを使用してください。電流容量は表 1 の突入電流値を参考にしてください。
Please insert a fuse or a circuit breaker to prevent possible damage of converter. Please refer to Table 1 (rush current) to select proper current capacity of fuse or circuit breaker.

VD SERIES

500W DC/DC CONVERTERS
Single Output

並列運転可能
Parallel Operation

H40×W100×L220 (mm)

■ Features

- ●High Output 500W
- ●High Efficiency 89%～93%
- ●Input-Output Isolation (AC2000V)
- ●Possible Parallel Operation up to 4 converters
- ●Remote ON/OFF Control
- ●Input Low Voltage Protection
- ●Input Over Voltage Protection
- ●Thermal Protection ＋110℃～＋120℃
- ●Cooling by mounting on Chassis or using Heat Sink
- ●Conformity to RoHS2 Directive
- ●No built-in aluminum and tantalum electrolytic capacitor

- ●高出力 500W
- ●高効率 89%～93%
- ●入出力間絶縁 (AC2000V)
- ●4台まで並列運転可能
- ●リモートON/OFFコントロール
- ●入力低電圧保護回路内蔵
- ●入力過電圧保護回路内蔵
- ●過熱保護回路内蔵 ＋110℃～＋120℃
- ●シャーシ上又はヒートシンクの取付により放熱
- ●RoHS2指令対応
- ●アルミ電解コンデンサ及びタンタルコンデンサ不使用

■ General Characteristics

(at Ta：25℃, Full Load, Nominal Vin)

●Input Voltage, Range	DC 12, 24, 48, 96, 200, 300, 400V (See Table 1)
●Output Voltage, Current	See Table 1
●Output Voltage Adjustment	±5%
●Efficiency	See Table 1
●Line Regulation	0.3% max. (at Vin Range)
●Load Regulation	3.0% typ. (0～100% Load) (See Fig. 4)
●Output Ripple	(1.0% Vout) p-p max.
●Output Noise	(0.5% Vout+100mV) p-p max.
●Short Circuit Protection	Built-in, Auto-restart (See Fig. 2)
●Output Over Voltage Protection	Built-in, Shut-down (120%～140% Vout)
●Remote ON/OFF Control	ON ： Short or 0～0.8V OFF： Open or 2～10V (Between terminal ③ ～ ④)
●Temperature Coefficient	0.02%/℃ max.
●Operating Ambient Temp.	－40℃～＋85℃ (See Fig. 1)
●Max. Case Temp.	＋105℃
●Storage Temp.	－40℃～＋115℃
●Isolation Voltage	AC2000V one minute (Input－Output－Case)
●Isolation Impedance	100MΩ min. (at DC1000V) (Input－Output－Case)
●Weight	Main Body : 2.1kg max. Heat Sink : 500g max.
●Humidity	20～95% RH
●Shock	490m/s^2 (11msec 3directions)
●Vibration	JIS E4031 Category 1 - Class B
●Surface Structure	Aluminum Case
●MTBF	160,000H (Ta：25℃, 80% Load, Nominal Vin)
●Warranty	5 years

■ Selection Guide

Table 1

Model Number	Input Voltage (Range) (V. DC)	Output Voltage (V. DC)	Output Current (A)	Efficiency (typ.) (%) 20% Load	Efficiency (typ.) (%) 80% Load
VD12 - 12S 42A	12 (9～18)	12	42	91	90
VD12 - 13.8S 36A		13.8	36	91	90
VD12 - 15S 33A		15	33	91	89
VD12 - 24S 21A		24	21	91	89
VD12 - 28S 18A		28	18	91	89
VD12 - 48S 10.5A		48	10.5	91	91
VD12 - 100S 5A		100	5	90	91
VD12 - 140S 3.6A		140	3.6	90	90
VD12 - 200S 2.5A		200	2.5	90	90
VD12 - 300S 1.7A		300	1.7	89	89
VD12 - 400S 1.25A		400	1.25	89	89
VD24 - 12S 42A	24 (18～36)	12	42	91	91
VD24 - 13.8S 36A		13.8	36	91	91
VD24 - 15S 33A		15	33	91	90
VD24 - 24S 21A		24	21	91	90
VD24 - 28S 18A		28	18	91	90
VD24 - 48S 10.5A		48	10.5	91	92
VD24 - 100S 5A		100	5	91	92
VD24 - 140S 3.6A		140	3.6	90	91
VD24 - 200S 2.5A		200	2.5	90	91
VD24 - 300S 1.7A		300	1.7	89	90
VD24 - 400S 1.25A		400	1.25	89	90
VD48 - 12S 42A	48 (36～75)	12	42	89	91
VD48 - 13.8S 36A		13.8	36	89	91
VD48 - 15S 33A		15	33	89	90
VD48 - 24S 21A		24	21	89	91
VD48 - 28S 18A		28	18	89	91
VD48 - 48S 10.5A		48	10.5	89	93
VD48 - 100S 5A		100	5	88	93
VD48 - 140S 3.6A		140	3.6	88	92
VD48 - 200S 2.5A		200	2.5	88	92
VD48 - 300S 1.7A		300	1.7	88	91
VD48 - 400S 1.25A		400	1.25	88	91
VD96 - 12S 42A	96 (70～144)	12	42	89	91
VD96 - 13.8S 36A		13.8	36	89	91
VD96 - 15S 33A		15	33	89	90
VD96 - 24S 21A		24	21	89	91
VD96 - 28S 18A		28	18	89	91
VD96 - 48S 10.5A		48	10.5	89	93
VD96 - 100S 5A		100	5	88	93
VD96 - 140S 3.6A		140	3.6	88	92
VD96 - 200S 2.5A		200	2.5	88	92
VD96 - 300S 1.7A		300	1.7	88	91
VD96 - 400S 1.25A		400	1.25	88	91
VD200 - 12S 42A	200 (150～300)	12	42	89	91
VD200 - 13.8S 36A		13.8	36	89	91
VD200 - 15S 33A		15	33	89	90
VD200 - 24S 21A		24	21	89	91
VD200 - 28S 18A		28	18	89	91
VD200 - 48S 10.5A		48	10.5	89	93
VD200 - 100S 5A		100	5	88	93
VD200 - 140S 3.6A		140	3.6	88	92
VD200 - 200S 2.5A		200	2.5	88	92
VD200 - 300S 1.7A		300	1.7	88	91
VD200 - 400S 1.25A		400	1.25	88	91
VD300 - 12S 42A	300 (225～450)	12	42	88	91
VD300 - 13.8S 36A		13.8	36	88	91
VD300 - 15S 33A		15	33	88	90
VD300 - 24S 21A		24	21	88	91
VD300 - 28S 18A		28	18	88	91
VD300 - 48S 10.5A		48	10.5	88	93
VD300 - 100S 5A		100	5	87	93
VD300 - 140S 3.6A		140	3.6	87	92
VD300 - 200S 2.5A		200	2.5	87	92
VD300 - 300S 1.7A		300	1.7	87	91
VD300 - 400S 1.25A		400	1.25	87	91
VD400 - 12S 42A	400 (300～600)	12	42	87	91
VD400 - 13.8S 36A		13.8	36	87	91
VD400 - 15S 33A		15	33	87	90
VD400 - 24S 21A		24	21	87	91
VD400 - 28S 18A		28	18	87	91
VD400 - 48S 10.5A		48	10.5	87	93
VD400 - 100S 5A		100	5	86	93
VD400 - 140S 3.6A		140	3.6	86	92
VD400 - 200S 2.5A		200	2.5	86	92
VD400 - 300S 1.7A		300	1.7	86	91
VD400 - 400S 1.25A		400	1.25	86	91

※ 上記仕様以外にも対応可能ですので お問い合わせ下さい。
Please consult with us about other specification.

■ Terminal Outs & Dimensions (±0.5mm)

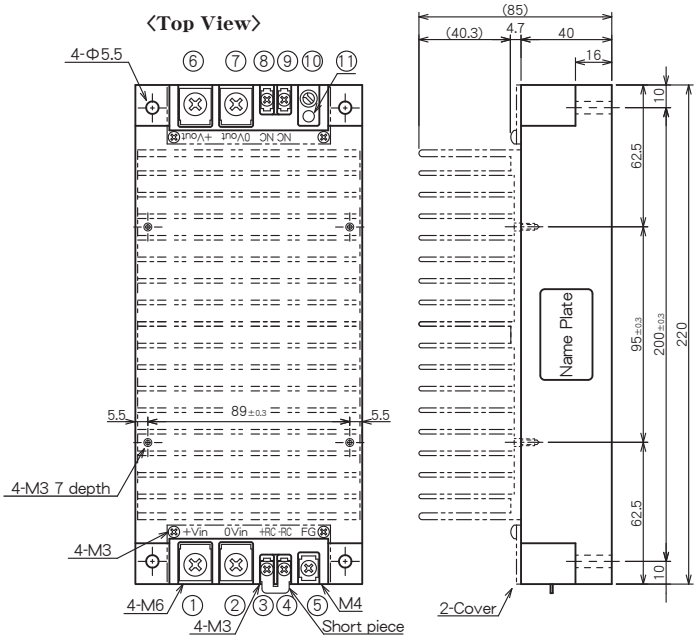

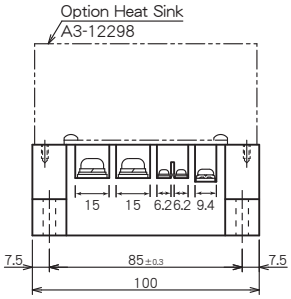

Terminal Outs and Function

①	+Vdc in	⑥	+Vdc out
②	0 Vdc in	⑦	0 Vdc out
③	+RC	⑧	NC
④	−RC	⑨	NC
⑤	FG	⑩	V.ADJ
		⑪	Operate Indicator

Voltage Adjustable Trimmer

＊Option Heat Sink Model : A3-12298

■ Block Diagram

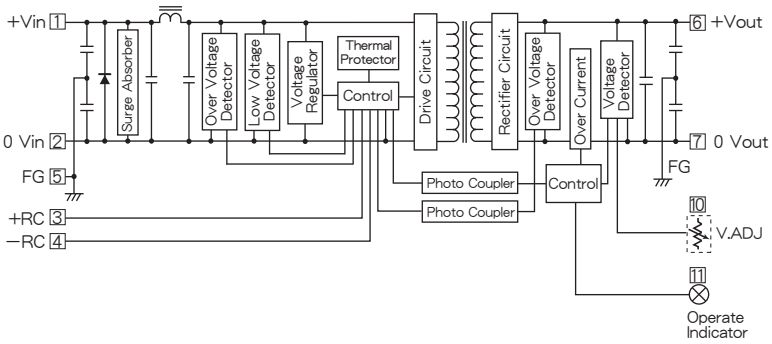

■ Characteristic Curves

Fig. 1 Derating Curve

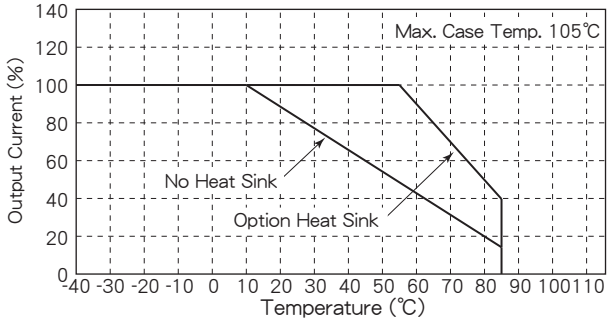

Fig. 2 Short Circuit Operating Area

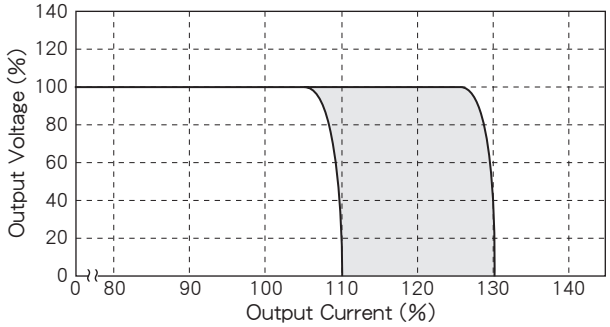

Fig. 3 Temperature Characteristic on Case Surface

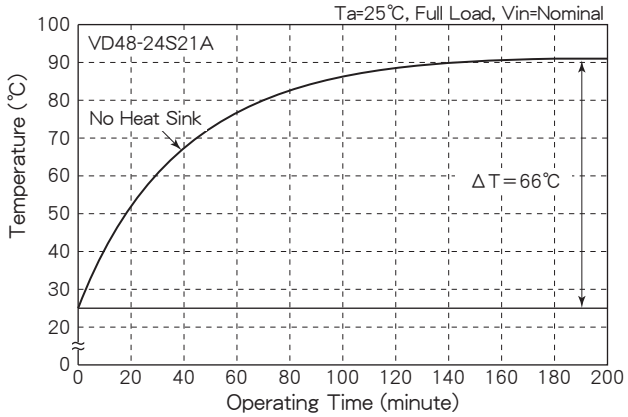

Fig. 4 Output Voltage vs. Output Current

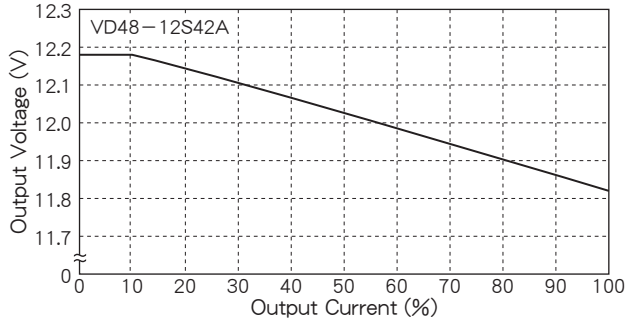

＊並列運転時に各モジュールの電流を平均化するため
負荷変動を大きくしてあります。
Load Regulation is regulated large on purpose to equate
the each unit's output current at parallel operation.

Fig. 5 Efficiency vs. Output Current

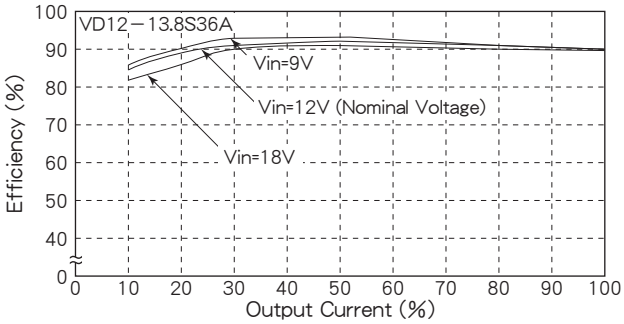

Fig. 6 Efficiency vs. Output Current

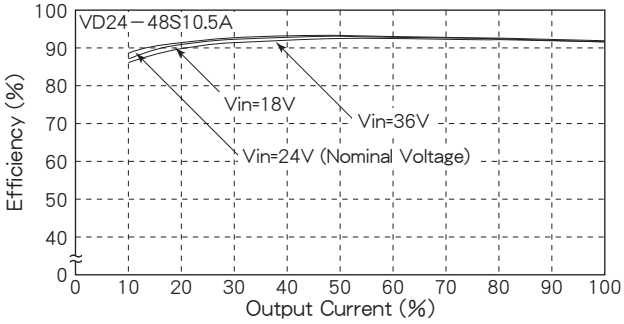

Fig. 7 Efficiency vs. Output Current

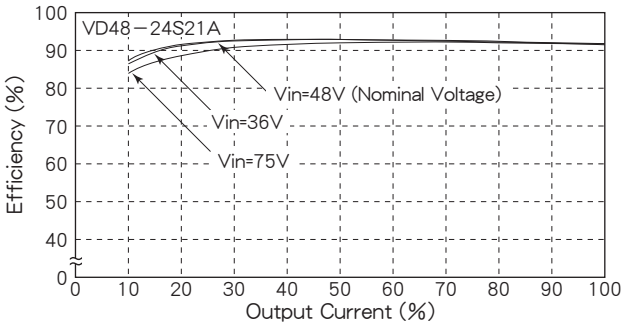

Fig. 8 Efficiency vs. Output Current

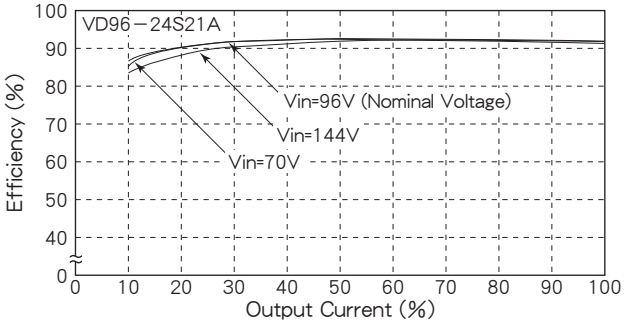

■ 主な機能及び注意事項 Function and direction in application

1. 入力低電圧保護、入力過電圧保護 Input low/over voltage protection
入力が定格範囲外になると出力を停止します。範囲内に戻すと自動復帰します。またヒステリシス特性を有しています。
This function stops output if input is out of the rated voltage range and restarts output automatically in the rating votage range. It also has hysteresis characteristic.

ヒステリシス特性　Hysteresis Characteristic

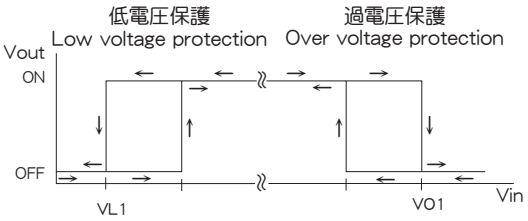

定格入力電圧 Rated input voltage	低電圧保護 Low voltage protection VL1	過電圧保護 Over voltage protection VO1
12V (9～ 18V)	6～8V	20～22V
24V (18～ 36V)	12～16V	40～44V
48V (36～ 75V)	24～32V	80～88V
96V (70～144V)	48～64V	152～160V
200V (150～300V)	100～133V	316～333V
300V (225～450V)	150～200V	474～500V
400V (300～600V)	200～266V	633～666V

2. 出力電圧値 Output voltage
出力電圧値はボリューム(V.ADJ)を回転させることにより、定格出力電圧の約±5%可変することができます。
Output voltage will be adjusted to ±5% of rated voltage by means of volume (V.ADJ).

3. 出力過電流保護 Output over current protection
負荷が短絡した場合など、過大な負荷電流が流れたときに負荷と本体を保護する機能です。定格出力電流の約105%～130%にて検出し作動します(Fig. 2 参照)。出力は定電流電圧垂下特性、入力電流はフの字特性となっています。また自動復帰特性を有しています。
This function is to protect a power supply and a load when excessive current flows in case of short-circuited load or such possible conditions. It will operate in 105 - 130% of rated output current (see Fig. 2). Output has constant current voltage limiting characteristic and input current has combined current limiting with fold-back protection. It also has automatic reset function.

4. 出力過電圧保護 Output over voltage protection
出力の過電圧から負荷側を保護する機能です。出力電圧値が定格値の約120～140%になると出力をOFFします。
This function is to protect a load from output over voltage. Output will be shut down when output voltage is 120 - 140% of rated voltge.

5. 並列運転 Parallel operation
同機種を並列に動作させることにより出力電流容量を増やすことができます。
並列運転は 4 台まで接続可能です。
It is possible to increase output current capacity by means of parallel operation of the same medel. Please see the figure below for wiring instructions.
Parallel operation is possible up to 4 converters.

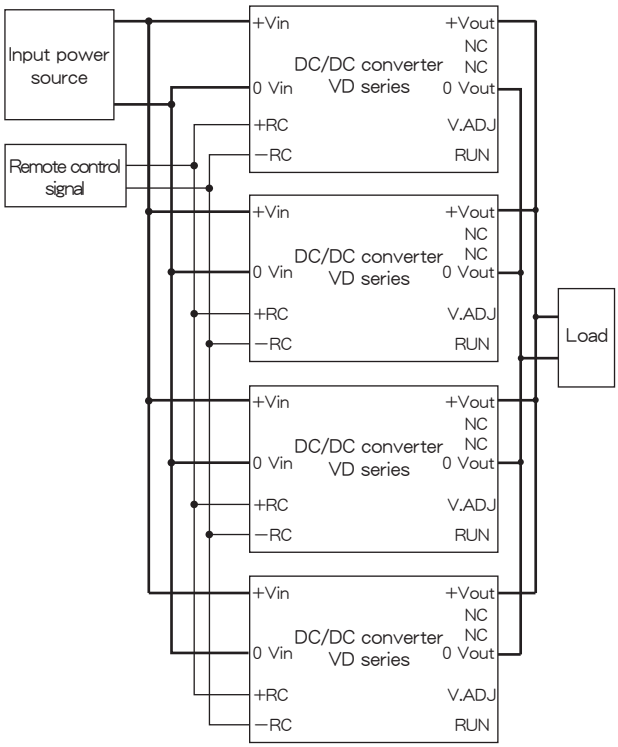

6. リモートON/OFFコントロール Remote ON/OFF control
リモートON/OFFコントロールを使用して、電源の出力をON/OFFする事ができます。RC端子間をショートする事で出力電圧がON、RC端子間をオープンにする事で出力電圧がOFFになります。RC端子間にTTLレベルの電気信号を加える事により出力をON/OFFする事ができます。RC端子は入力側にあり、入力電源回路とは絶縁されていません。ON/OFFコントロールを使用しないときは、＋RC端子と－RC端子を付属のショートピンで短絡させて下さい。
Using remote ON/OFF control, ON/OFF of the power supply output is possible. The output voltage operates by a short between RC terminals, and the output voltage stops by open between RC terminals. ON/OFF of the output voltage is possible by adding the electrical signal of the TTL level between RC terminals. RC terminals are located on the input side and the circuit is not isolated from input power source circuit. In case you don't use ON/OFF control, please short-circuit ＋RC and －RC terminals by means of attached short-bar.

＊回路構成例 Example of ON/OFF control circuit

●TRによる例 Example by transistor　●SWによる例 Example by switch

XD SERIES NEW

1000W DC/DC CONVERTERS Single Output

並列運転可能
Parallel Operation

H55×W120×L280 (mm)

■ Features

- High Output 1000W
- High Efficiency 89%～93%
- Input-Output Isolation (AC2000V)
- Possible Parallel Operation up to 4 converters
- Remote ON/OFF Control
- Input Low Voltage Protection
- Input Over Voltage Protection
- Thermal Protection ＋110℃～＋120℃
- Cooling by mounting on Chassis or using Heat Sink
- Conformity to RoHS2 Directive
- No aluminum electrolytic capacitor and no tantalum capacitor are used.
- Built-in Input Fuse

- 高出力 1000W
- 高効率 89%～93%
- 入出力間絶縁 (AC2000V)
- 4台まで並列運転可能
- リモートON/OFFコントロール
- 入力低電圧保護回路内蔵
- 入力過電圧保護回路内蔵
- 過熱保護回路内蔵 ＋110℃～＋120℃
- シャーシ上又はヒートシンクの取付により放熱
- RoHS2指令対応
- アルミ電解コンデンサ及びタンタルコンデンサ不使用
- 入力ヒューズ内蔵

■ General Characteristics

(at Ta : 25℃, Full Load, Nominal Vin)

● Input Voltage, Range	DC 100, 200, 300, 400, 600V (See Table 1)
● Output Voltage, Current	See Table 1
● Output Voltage Adjustment	±5%
● Efficiency	See Table 1
● Line Regulation	0.3% max. (at Vin Range)
● Load Regulation	3.0% typ. (0～100% Load)
● Output Ripple	200mV p-p max.
● Output Noise	500mV p-p max.
● Short Circuit Protection	Built-in, Auto-restart
● Output Over Voltage Protection	Built-in, Shut-down (120%～140% Vout)
● Remote ON/OFF Control	ON : Short OFF : Open (Between pin ③ ～ ④)
● Temperature Coefficient	0.02%／℃ max.
● Operating Ambient Temp.	－40℃～＋85℃
● Max. Case Temp.	＋105℃
● Storage Temp.	－40℃～＋115℃
● Isolation Voltage	AC2000V one minute (Input－Output－Case)
● Isolation Impedance	100MΩ min. (at DC1000V) (Input－Output－Case)
● Weight	Main Body : 4.2kg max. Heat sink : 600g max.
● Humidity	20～95% RH
● Shock	490m/s² (11msec 3directions)
● Vibration	JIS E4031 Category 1 - Class B
● Surface Structure	Aluminium Case
● MTBF	120,000H (Ta : 25℃, 80%Load, Nominal Vin)
● Warranty	5 years

■ Terminal Outs & Dimensions (±0.5mm)

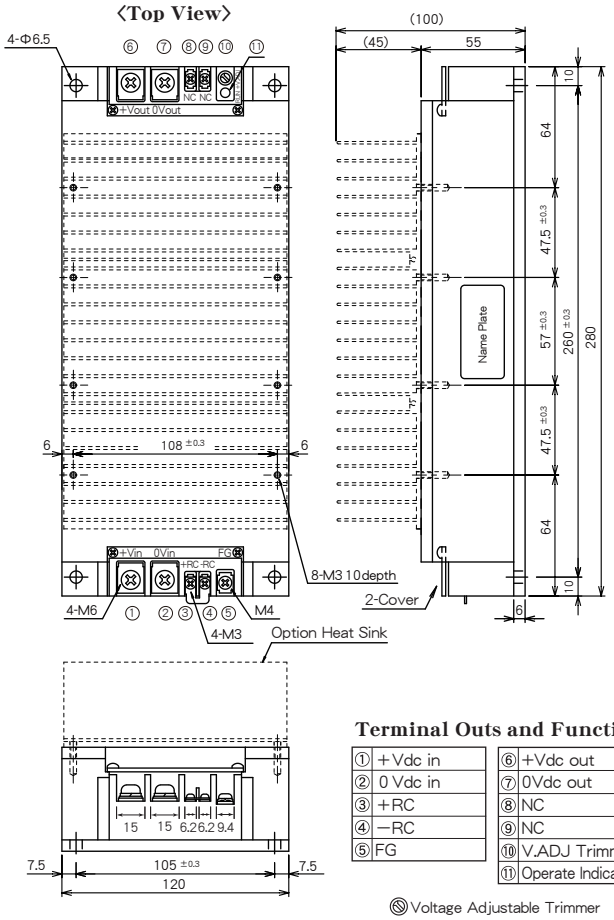

Terminal Outs and Function

① ＋Vdc in	⑥ ＋Vdc out
② 0 Vdc in	⑦ 0Vdc out
③ ＋RC	⑧ NC
④ －RC	⑨ NC
⑤ FG	⑩ V.ADJ Trimmer
	⑪ Operate Indicator

Ⓢ Voltage Adjustable Trimmer

＊Option Heat Sink Model : A3-15568

■ Selection Guide

Table 1

Model Number	Input Voltage (Range) (V. DC)	Output Voltage (V. DC)	Output Current (A)	Efficiency (typ.) (%) 20% Load	Efficiency (typ.) (%) 80% Load
XD100 - 24S42A	100(70～144)	24	42	89	93
XD200 - 24S42A	200(150～300)	24	42	89	93
XD300 - 24S42A	300(225～450)	24	42	89	93
XD400 - 24S42A	400(300～600)	24	42	89	93
XD600 - 24S42A	600(420～730)	24	42	89	93

※ 上記仕様以外にも対応可能ですので お問い合わせ下さい。
Please consult with us about other specification.